US009638454B2

(12) **United States Patent**
Klingshirn et al.

(10) **Patent No.: US 9,638,454 B2**
(45) **Date of Patent: May 2, 2017**

(54) **REFRIGERATION APPLIANCE**

(71) Applicant: **BSH BOSCH UND SIEMENS HAUSGERÄTE GmbH**, München (DE)

(72) Inventors: **Astrid Klingshirn**, Zusmarshausen (DE); **Immanuel Ring**, Bopfingen (DE); **Markus Spielmannleitner**, Ellwangen (DE)

(73) Assignee: **BSH Hausgeräte GmbH**, Munich (DE)

(*) Notice: Subject to any disclaimer, the term of this patent is extended or adjusted under 35 U.S.C. 154(b) by 267 days.

(21) Appl. No.: **14/406,333**

(22) PCT Filed: **Jun. 7, 2013**

(86) PCT No.: **PCT/EP2013/061776**

§ 371 (c)(1),
(2) Date: **Dec. 8, 2014**

(87) PCT Pub. No.: **WO2013/186132**

PCT Pub. Date: **Dec. 19, 2013**

(65) **Prior Publication Data**

US 2015/0323240 A1 Nov. 12, 2015

(30) **Foreign Application Priority Data**

Jun. 13, 2012 (DE) 10 2012 209 937

(51) **Int. Cl.**
F25D 17/06 (2006.01)

(52) **U.S. Cl.**
CPC ***F25D 17/065*** (2013.01); ***F25D 17/062*** (2013.01); *F25D 2317/04131* (2013.01)

(58) **Field of Classification Search**
CPC F25D 17/062; F25D 17/065; F25D 2317/04131
USPC 62/187
See application file for complete search history.

(56) **References Cited**

U.S. PATENT DOCUMENTS

2,543,494	A	2/1951	Hartman	
7,665,327	B2 *	2/2010	Tunzi	F25D 17/065 62/408
2006/0021365	A1 *	2/2006	Cushman	F25D 17/045 62/187

FOREIGN PATENT DOCUMENTS

CN	1532495		9/2004	
CN	1714265	A	12/2005	
CN	101356936		2/2009	
CN	102313426		1/2012	
DE	102007062004	A1 *	6/2009	F25D 25/025
JP	5-196339		8/1993	
JP	2009-121803		6/2009	

(Continued)

OTHER PUBLICATIONS

International Search Report for PCT/EP2013/061776 mailed Sep. 16, 2013, 4 pages.

(Continued)

Primary Examiner — Marc Norman
(74) *Attorney, Agent, or Firm* — Nixon & Vanderhye P.C.

(57) **ABSTRACT**

A refrigeration appliance, particularly a household refrigeration appliance, has a storage space for cooled material, wherein at least one passage for the flow of air into and out of the storage space is formed in a wall delimiting the storage space. The passage can be closed by a movable closure element. A fan for driving an air flow is arranged in the storage space and can be operated with the passage closed.
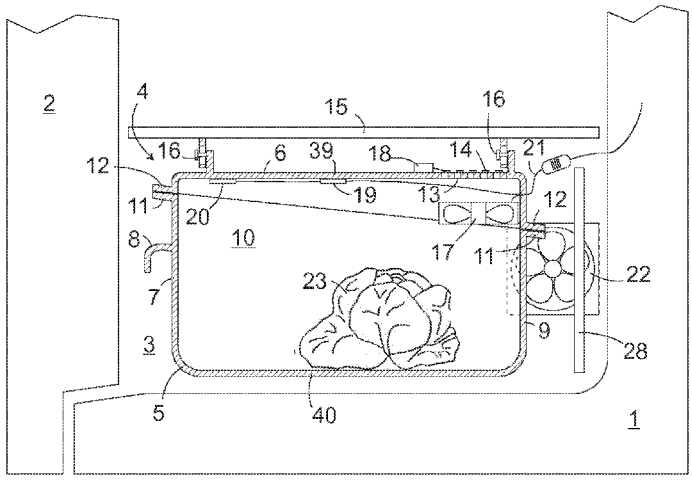
22 Claims, 3 Drawing Sheets