US009638354B1

(12) **United States Patent**
Ogueli et al.

(10) **Patent No.: US 9,638,354 B1**
(45) **Date of Patent: May 2, 2017**

(54) **CABLE ORGANIZING ASSEMBLY**

(71) Applicants: **Vivian Ogueli**, Bellflower, CA (US); **Godwin Ogueli**, Bellflower, CA (US)

(72) Inventors: **Vivian Ogueli**, Bellflower, CA (US); **Godwin Ogueli**, Bellflower, CA (US)

(*) Notice: Subject to any disclaimer, the term of this patent is extended or adjusted under 35 U.S.C. 154(b) by 0 days.

(21) Appl. No.: **15/002,680**

(22) Filed: **Jan. 21, 2016**

(51) **Int. Cl.**

A61M 5/32	(2006.01)
F16L 3/223	(2006.01)
F16L 3/10	(2006.01)
F16B 47/00	(2006.01)
A61G 7/05	(2006.01)
A61M 5/14	(2006.01)

(52) **U.S. Cl.**
CPC ***F16L 3/2235*** (2013.01); ***A61G 7/05*** (2013.01); ***A61M 5/1418*** (2013.01); ***F16B 47/003*** (2013.01); ***F16L 3/1041*** (2013.01); ***F16L 3/1075*** (2013.01)

(58) **Field of Classification Search**
CPC F16L 3/2235; F16L 3/1041; F16L 3/1075; F16L 47/003; A61G 7/05; A61G 7/1076; A61M 5/1418; A61M 25/02; A61M 25/024; A61M 2025/024
USPC 248/68.1; 128/346, 849, 885; 604/180, 604/174
See application file for complete search history.

(56) **References Cited**

U.S. PATENT DOCUMENTS

4,896,465	A *	1/1990	Rhodes	A61M 5/1418 128/849
5,127,545	A *	7/1992	French	A45F 5/00 221/102
D328,820	S	8/1992	Davie	
5,558,440	A *	9/1996	Miller	A45C 1/04 224/219
7,255,251	B1	8/2007	Smith	
2004/0118982	A1	6/2004	Shillings et al.	
2005/0273987	A1	12/2005	Honchel	
2006/0031988	A1	2/2006	Morse	
2007/0282272	A1	12/2007	Bannon et al.	
2011/0295210	A1*	12/2011	Wright	A61M 25/02 604/180
2012/0277682	A1	11/2012	Corato et al.	
2013/0165863	A1*	6/2013	Nilson	A61M 25/02 604/180
2014/0306070	A1	10/2014	Hartsock et al.	

FOREIGN PATENT DOCUMENTS

WO	WO2009110803	9/2009

* cited by examiner

Primary Examiner — Todd M Epps

(57) **ABSTRACT**

A cable organizing assembly includes a pair of mounts. Each of the mounts includes a rotatable base. The rotatable base corresponding to each of the mounts may be removably coupled to a support. Each of the mounts includes a clamping unit. The clamping unit may engage at least one cable thereby facilitating the at least one cable to be removably coupled to the support.
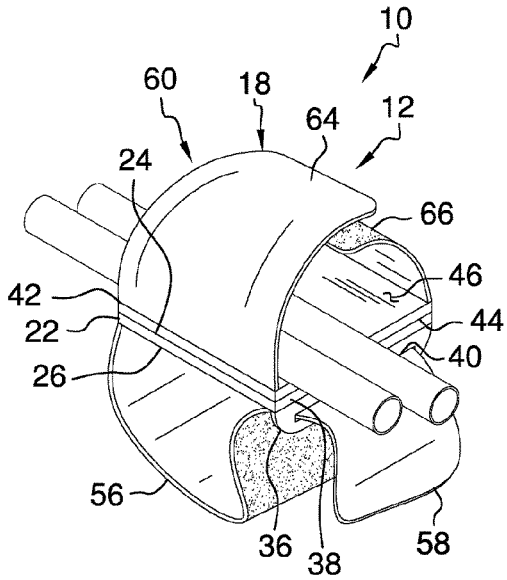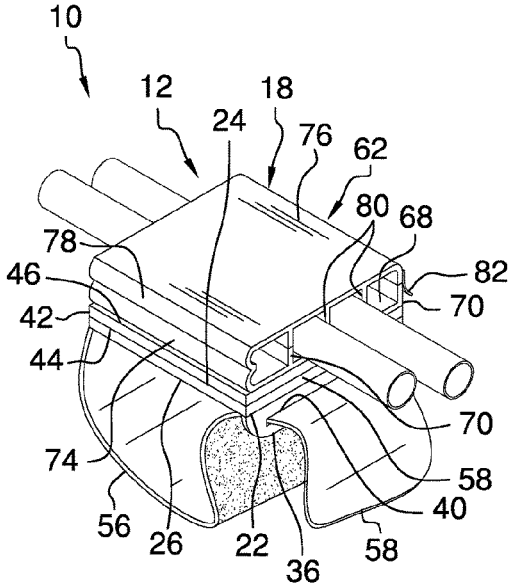
11 Claims, 4 Drawing Sheets