US008327754B2

(12) **United States Patent**
Kirschner et al.

(10) **Patent No.: US 8,327,754 B2**
(45) **Date of Patent: Dec. 11, 2012**

(54) **COFFEE AND TEA POD**

(75) Inventors: **Jonathan Kirschner**, Powder Springs, GA (US); **Charles Bradley Green**, Dacula, GA (US); **Louis Joseph Heinsz**, Fayetteville, GA (US)

(73) Assignee: **The Coca-Cola Company**, Atlanta, GA (US)

(*) Notice: Subject to any disclaimer, the term of this patent is extended or adjusted under 35 U.S.C. 154(b) by 2262 days.

(21) Appl. No.: **10/908,350**

(22) Filed: **May 9, 2005**

(65) **Prior Publication Data**

US 2005/0183581 A1 Aug. 25, 2005

Related U.S. Application Data

(63) Continuation-in-part of application No. 10/604,445, filed on Jul. 22, 2003, now Pat. No. 6,948,420.

(51) **Int. Cl.**
B65B 29/02 (2006.01)

(52) **U.S. Cl.** **99/295**; 99/323; 426/77; 426/115

(58) **Field of Classification Search** 99/295, 99/323; 426/433, 77, 115
See application file for complete search history.

(56) **References Cited**

U.S. PATENT DOCUMENTS

1,951,357	A		3/1934	Hall
2,743,664	A		5/1956	Dale
2,778,739	A		1/1957	Rodth
2,968,560	A		1/1961	Goros 99/77.1
3,151,418	A		10/1964	Powell et al.
3,275,448	A		9/1966	Sommer
3,428,460	A		2/1969	Ely
3,589,272	A		1/1970	Bouladon 99/295
3,713,842	A		1/1973	Lubsen et al.
3,812,273	A		5/1974	Schmidt 426/433
3,823,656	A		7/1974	Vekekn 99/295
3,888,999	A		6/1975	Jones et al.
3,952,641	A		4/1976	Vitous 99/295
4,081,560	A		3/1978	Ishigaki
4,107,339	A		8/1978	Shrimpton
4,158,330	A		6/1979	Vitous 99/295
4,254,694	A		3/1981	Illy 99/295
4,389,925	A	*	6/1983	Piana ..... 99/289 R
4,429,623	A		2/1984	Illy 99/295
4,471,689	A	*	9/1984	Piana 99/295
4,581,239	A		4/1986	Woolman et al. 426/433
4,605,175	A		8/1986	Weber
4,644,855	A		2/1987	Woolman et al. 99/280
4,775,048	A		10/1988	Baecchi et al. 206/0.5

(Continued)

FOREIGN PATENT DOCUMENTS

BE	701.863	1/1968

(Continued)

OTHER PUBLICATIONS

Title: The Complexity of Coffee; by Emeto Illy; Scientific American; Jun. 2002; pp. 86-91.

(Continued)

Primary Examiner — Reginald L Alexander
(74) *Attorney, Agent, or Firm* — Sutherland Asbill & Brennan LLP

(57) **ABSTRACT**

A pod for holding an amount of mixable material. The pod may include a circular sidewall and a base. The base may include a number of apertures. A substantially stiff filter paper may be positioned about the base.
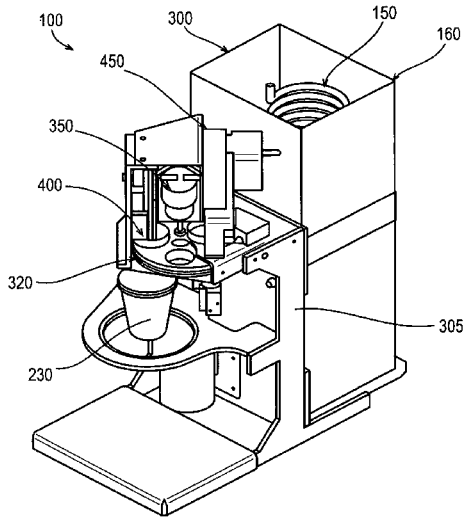
4 Claims, 8 Drawing Sheets