United States Patent [19]

Mead

[11] **Patent Number: 4,924,954**

[45] **Date of Patent: May 15, 1990**

[54] **BIT BREAKOUT SYSTEM**

[76] Inventor: **Raymond A. Mead,** 1596 Kingsbury, Casper, Wyo. 82609

[21] Appl. No.: **380,623**

[22] Filed: **Jul. 14, 1989**

[51] **Int. Cl.**[5] **E21B 19/18**

[52] **U.S. Cl.** **175/315;** 166/85; 166/77.5; 81/57.34; 81/57.35; 173/164

[58] **Field of Search** 166/77.5, 85, 379; 175/85, 315; 173/164; 81/57.16, 57.34, 57.35

[56] **References Cited**

U.S. PATENT DOCUMENTS

1,044,349	11/1912	Chapman	173/164
1,449,581	3/1923	Brewster	173/164
1,445,142	5/1923	Loyd .	
1,506,583	8/1924	Hoffman .	
2,054,223	9/1936	Le Bus .	
2,719,025	9/1955	Stone .	
3,195,640	7/1965	Wilde .	
3,239,016	3/1966	Alexander .	
3,446,284	5/1969	Dyer et al. .	
3,463,247	8/1969	Klein .	
3,554,298	8/1969	Klein .	
3,552,506	1/1971	Mayer .	
3,739,434	6/1973	Wheeler .	
3,762,578	10/1973	Cooper et al.	175/85
3,768,579	10/1973	Klein .	
3,944,300	3/1976	Learmont et al.	173/164
3,980,143	9/1976	Swartz et al.	166/77.5
4,030,542	6/1977	Poe et al.	173/164
4,057,887	11/1977	Jones et al. .	
4,352,399	10/1982	Davis .	
4,410,044	10/1983	Naffziger .	
4,475,604	10/1984	Albertson et al.	173/164
4,495,840	1/1985	Freitag et al. .	
4,844,171	7/1989	Russell, Jr.	166/77.5

Primary Examiner—Bruce M. Kisliuk

Attorney, Agent, or Firm—Dean P. Edmundson

[57] **ABSTRACT**

A system for securing a drill bit against rotation in a drilling rig of the type having a rotary table with an opening which is smaller than the drill bit. A breaker plate is supported in a frame below the rotary table. The breaker plate includes an irregularly shaped opening for engaging the drill bit when the drill string is raised. A sub is connected between the bit and the drill string. The sub can be rotated by the rotary table when the bit is held by the breaker plate to attach or detach the bit.
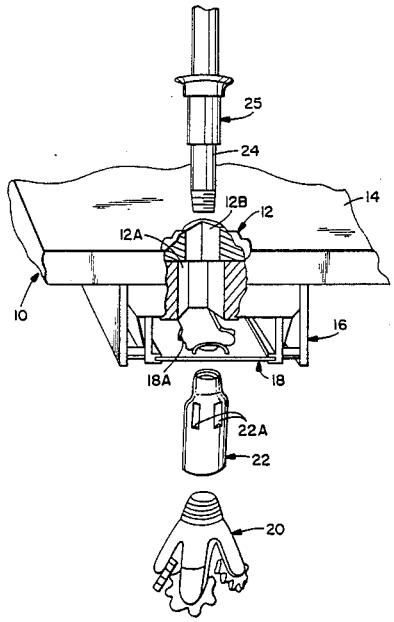
14 Claims, 3 Drawing Sheets