US009510954B2

(12) **United States Patent**
Glerum et al.

(10) **Patent No.: US 9,510,954 B2**
(45) **Date of Patent: Dec. 6, 2016**

(54) **EXPANDABLE FUSION DEVICE AND METHOD OF INSTALLATION THEREOF**

(71) Applicant: **GLOBUS MEDICAL, INC**, Audubon, PA (US)

(72) Inventors: **Chad Glerum**, Pennsburg, PA (US); **Sean Suh**, Jamesburg, NJ (US)

(73) Assignee: **Globus Medical, Inc.**, Audobon, PA (US)

(*) Notice: Subject to any disclaimer, the term of this patent is extended or adjusted under 35 U.S.C. 154(b) by 55 days.

(21) Appl. No.: **14/326,513**

(22) Filed: **Jul. 9, 2014**

(65) **Prior Publication Data**

US 2014/0324171 A1 Oct. 30, 2014

Related U.S. Application Data

(63) Continuation of application No. 13/273,994, filed on Oct. 14, 2011, which is a continuation of application (Continued)

(51) **Int. Cl.**

A61F 2/44	(2006.01)
A61F 2/30	(2006.01)
A61F 2/46	(2006.01)

(52) **U.S. Cl.**

CPC ..... ***A61F 2/447*** (2013.01); ***A61F 2/4611*** (2013.01); *A61F 2002/3008* (2013.01); *A61F 2002/3052* (2013.01); *A61F 2002/3055* (2013.01); *A61F 2002/3093* (2013.01); *A61F 2002/30387* (2013.01); *A61F 2002/30448* (2013.01); *A61F 2002/30492* (2013.01); *A61F 2002/30507* (2013.01); *A61F 2002/30515* (2013.01); *A61F 2002/30523* (2013.01); *A61F 2002/30556* (2013.01); *A61F 2002/30579* (2013.01); *A61F 2002/30622* (2013.01); *A61F 2002/30777* (2013.01); *A61F 2002/30878* (2013.01); *A61F 2002/30904* (2013.01); *A61F 2002/448* (2013.01); *A61F 2002/4475* (2013.01); *A61F 2002/4629* (2013.01); (Continued)

(58) **Field of Classification Search**

CPC A61F 2002/30492; A61F 2002/30515; A61F 2002/30556; A61F 2002/448; A61F 2002/30471; A61F 2002/30624; A61F 2002/30629

See application file for complete search history.

(56) **References Cited**

U.S. PATENT DOCUMENTS

4,349,921	A	9/1982	Kuntz
4,599,086	A	7/1986	Doty

(Continued)

FOREIGN PATENT DOCUMENTS

DE	4012622	C1	7/1991
DE	4327054	C1	4/1995

(Continued)

Primary Examiner — Jan Christopher Merene
Assistant Examiner — Atiya Mahmud

(57) **ABSTRACT**

Two or more expandable fusion devices are capable of being installed inside an intervertebral disc space. The devices may be implanted at varying heights to maintain disc spacing and restore spinal stability, thereby facilitating an intervertebral fusion. In one embodiment, two implants are implanted into the intervertebral disc space and then expanded or contracted to different heights.
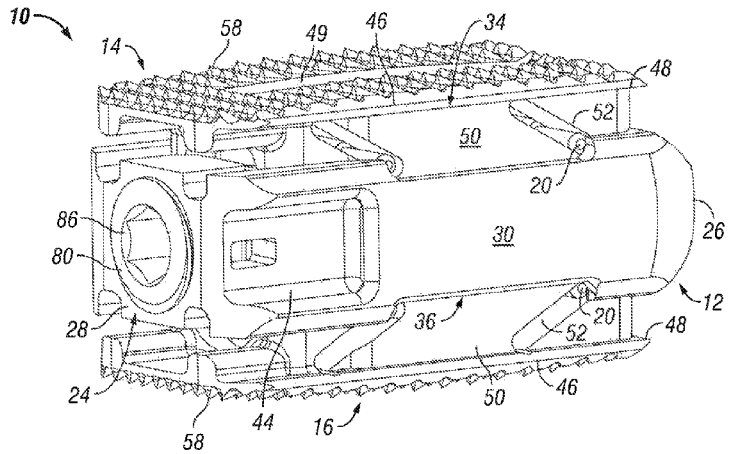
11 Claims, 8 Drawing Sheets