US009510854B2

(12) **United States Patent**
Mallaby

(10) **Patent No.: US 9,510,854 B2**
(45) **Date of Patent: Dec. 6, 2016**

(54) **THROMBECTOMY CATHETER WITH CONTROL BOX HAVING PRESSURE/VACUUM VALVE FOR SYNCHRONOUS ASPIRATION AND FLUID IRRIGATION**

(75) Inventor: **Mark Mallaby**, San Diego, CA (US)

(73) Assignee: **BOSTON SCIENTIFIC SCIMED, INC.**, Maple Grove, MN (US)

(*) Notice: Subject to any disclaimer, the term of this patent is extended or adjusted under 35 U.S.C. 154(b) by 1241 days.

(21) Appl. No.: **12/250,286**

(22) Filed: **Oct. 13, 2008**

(65) **Prior Publication Data**

US 2010/0094201 A1 Apr. 15, 2010

(51) **Int. Cl.**
A61B 17/3203 (2006.01)
A61B 17/22 (2006.01)

(52) **U.S. Cl.**
CPC ***A61B 17/32037*** (2013.01); *A61B 2017/22079* (2013.01); *A61B 2217/005* (2013.01); *A61B 2217/007* (2013.01)

(58) **Field of Classification Search**
CPC A61B 17/320068; A61B 2017/22079; A61B 2217/005; A61B 2217/007; A61M 1/0064; A61M 1/0084; A61F 9/00745
USPC 604/22, 31, 65, 67, 70, 118–120, 525; 606/159
See application file for complete search history.

(56) **References Cited**

U.S. PATENT DOCUMENTS

3,589,363 A * 6/1971 Banko A61B 17/320068 604/22
3,693,613 A 9/1972 Kelman
3,818,913 A * 6/1974 Wallach A61F 9/00736 604/28
3,930,505 A * 1/1976 Wallach A61M 1/0084 604/22
4,274,411 A * 6/1981 Dotson, Jr. A61F 9/00763 128/910
4,299,221 A * 11/1981 Phillips A61C 17/04 433/100
4,465,470 A * 8/1984 Kelman 604/27
4,690,672 A 9/1987 Veltrup
4,832,685 A * 5/1989 Haines A61F 9/00745 604/30
5,135,482 A 8/1992 Neracher
5,318,518 A 6/1994 Plechinger et al.
5,322,504 A 6/1994 Doherty et al.
5,342,293 A 8/1994 Zanger
5,395,315 A 3/1995 Griep
5,403,276 A * 4/1995 Schechter A61B 17/32002 604/118

(Continued)

FOREIGN PATENT DOCUMENTS

DE 37 15 418 A1 11/1987
EP 806213 A1 * 11/1997 ..... A61M 1/00

(Continued)

Primary Examiner — Kami A Bosworth
Assistant Examiner — Matthew A Engel
(74) *Attorney, Agent, or Firm* — Seager Tufte & Wickhem LLP

(57) **ABSTRACT**

A thrombectomy system comprising an aspiration catheter having an aspiration lumen and a high pressure irrigation lumen, the aspiration catheter having a proximal end and a distal, and a control box fluidly connected to the aspiration catheter and configured to synchronously provide irrigation and vacuum through the aspiration catheter.
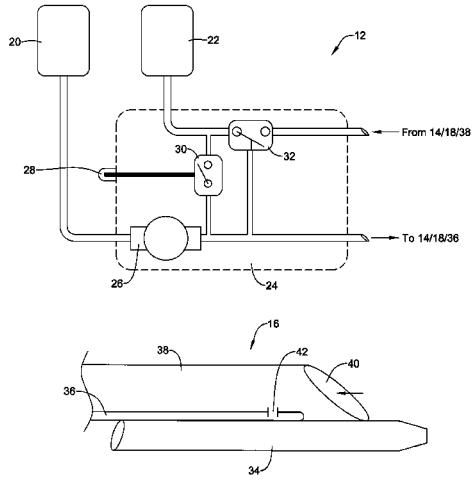
23 Claims, 3 Drawing Sheets