United States Patent [19]

Maeda et al.

[11] **Patent Number: 5,008,854**

[45] **Date of Patent: Apr. 16, 1991**

[54] **POCKET SIZE DATA STORAGE APPARATUS WITH TABLET DEVICE FOR INPUTTING IMAGE DATA**

[75] Inventors: **Junichi Maeda; Tsuguo Yanai; Kazuto Yamamoto; Yuji Kuriyama; Haruo Yamamoto**, all of Tokyo, Japan

[73] Assignee: **Casio Computer Co., Ltd.**, Tokyo, Japan

[21] Appl. No.: **423,604**

[22] Filed: **Oct. 16, 1989**

Related U.S. Application Data

[63] Continuation of Ser. No. 235,709, Aug. 19, 1988, abandoned, which is a continuation of Ser. No. 946,712, Dec. 24, 1986, abandoned.

[30] **Foreign Application Priority Data**

Jun. 19, 1986 [JP] Japan ..... 61-93502[U]

[51] **Int. Cl.**[5] **G06F 3/02**

[52] **U.S. Cl.** **364/900**; 364/927; 364/963; 364/705.06; 364/709.01; 364/709.04; 364/709.11; 340/706

[58] **Field of Search** 364/705.01, 705.06, 364/709.01, 709.02, 709.03, 709.04, 709.11, 709.12, 709.13, 709.14, 710.11, 710.14, 518, 521, 188, 190, 200, 900; 340/706, 712; 382/13

[56] **References Cited**

U.S. PATENT DOCUMENTS

3,959,585	5/1976	Mattes et al.	178/18
3,999,050	12/1976	Pitroda	235/152
4,117,542	9/1978	Klausner et al. .	
4,129,747	12/1978	Pepper, Jr.	178/19
4,276,541	6/1981	Inoue et al.	364/900 X
4,279,022	7/1981	Abe	364/900
4,318,096	3/1982	Thornburg et al.	340/706
4,389,711	6/1983	Hotta et al.	364/556
4,402,056	8/1983	Sado et al.	364/705
4,530,068	7/1985	Nakanishi et al.	364/900
4,578,811	3/1986	Inagaki	382/11
4,583,189	4/1986	Koyama	364/709.01 X
4,639,720	1/1987	Rympalski et al.	340/712
4,656,317	4/1987	Tsugei et al.	382/13 X
4,715,010	12/1987	Inoue et al.	364/705.06
4,740,913	4/1988	Washizuka et al.	364/900
4,752,773	6/1988	Togawa et al.	340/721

FOREIGN PATENT DOCUMENTS

2145547	3/1985	United Kingdom	364/709.11

Primary Examiner—Dale M. Shaw
Assistant Examiner—Michael A. Jaffe
Attorney, Agent, or Firm—Frishauf, Holtz, Goodman & Woodward

[57] **ABSTRACT**

A pocket size data storage apparatus with a tablet device for inputting image data, of the present invention, has a display section of a dot matrix type, and a tablet device made of transparent members and mounted on this display section as one unit. Image data is input from the tablet device and displayed on the display section. Character data input by operating the character keys can be displayed together with the image data. Image data and character data are related to each other as a pair of data and are stored.
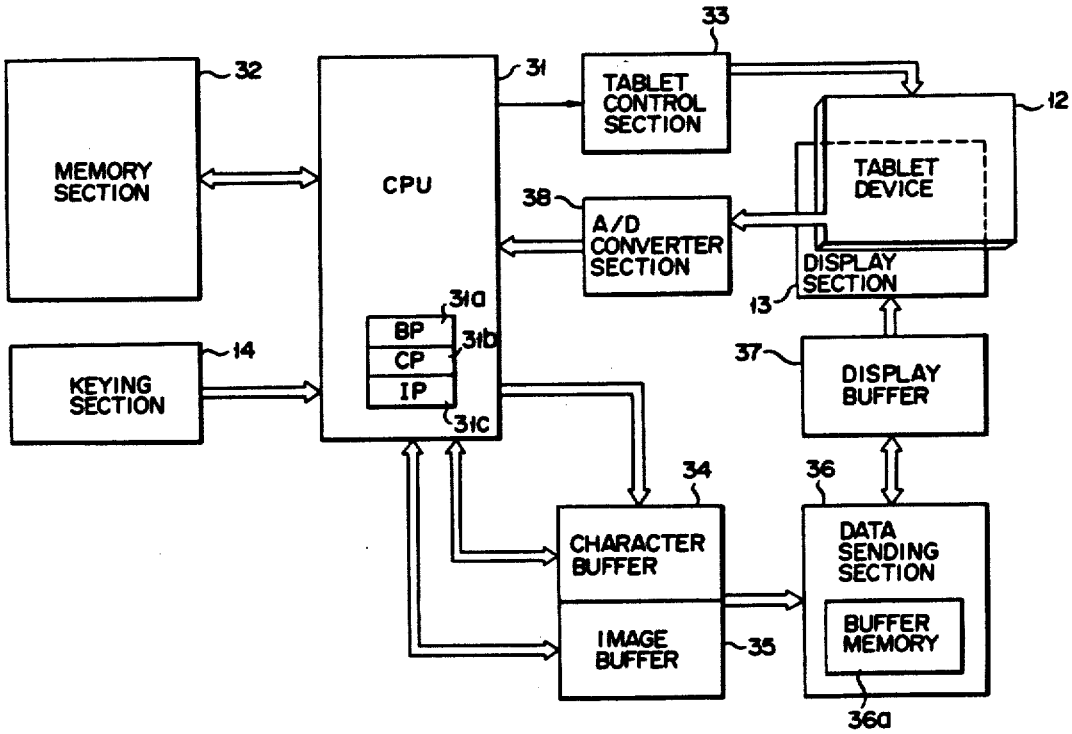
18 Claims, 34 Drawing Sheets