US009408454B2

(12) **United States Patent**
Schmidt et al.

(10) **Patent No.: US 9,408,454 B2**
(45) **Date of Patent: Aug. 9, 2016**

(54) **PENCIL**

(71) Applicant: **Schwan-STABILO Cosmetics GmbH & Co. KG**, Heroldsberg (DE)

(72) Inventors: **Ralf Schmidt**, Rosstal (DE); **Andreas Weber**, Heroldsberg (DE); **Clemens Wiesmann**, Heroldsberg (DE)

(73) Assignee: **Schwan-STABILO Cosmetics GmbH & Co. KG**, Heroldsberg (DE)

(*) Notice: Subject to any disclaimer, the term of this patent is extended or adjusted under 35 U.S.C. 154(b) by 119 days.

(21) Appl. No.: **14/074,789**

(22) Filed: **Nov. 8, 2013**

(65) **Prior Publication Data**

US 2014/0064819 A1 Mar. 6, 2014

Related U.S. Application Data

(62) Division of application No. 12/267,170, filed on Nov. 7, 2008, now Pat. No. 8,596,895.

(30) **Foreign Application Priority Data**

Nov. 12, 2007 (DE) ..... 20 2007 015 725 U

(51) **Int. Cl.**

A45D 40/08	(2006.01)
A45D 40/20	(2006.01)
B43K 21/02	(2006.01)
B43K 23/10	(2006.01)
B43K 24/06	(2006.01)
B43K 29/06	(2006.01)
B43L 23/06	(2006.01)
B43L 23/08	(2006.01)
B43L 23/00	(2006.01)

(52) **U.S. Cl.**

CPC ***A45D 40/08*** (2013.01); ***A45D 40/20*** (2013.01); ***B43K 21/02*** (2013.01); ***B43K 23/10*** (2013.01); ***B43K 24/06*** (2013.01); ***B43K 29/06*** (2013.01); ***B43L 23/00*** (2013.01); ***B43L 23/06*** (2013.01); ***B43L 23/08*** (2013.01); *A45D 2040/202* (2013.01)

(58) **Field of Classification Search**

CPC A45D 40/08; B43K 29/06; B43L 23/00; B43L 23/004; B43L 23/06; A45D 2040/202

USPC 401/50, 98

See application file for complete search history.

(56) **References Cited**

U.S. PATENT DOCUMENTS

419,768	A	1/1890	Haas
1,242,049	A	10/1917	Schlichtinger
2,065,800	A	12/1936	Freeman
2,037,119	A	1/1943	Duany
2,307,119	A	1/1943	Duany

(Continued)

FOREIGN PATENT DOCUMENTS

DE	196 16 613	10/1997
FR	1014921	8/1952

(Continued)

Primary Examiner — Mark A Laurenzi
Assistant Examiner — Bradley Oliver
(74) *Attorney, Agent, or Firm* — Bachman & LaPointe, PC

(57) **ABSTRACT**

The invention concerns a pencil comprising a lead, a protective cap and a device for shaping the lead in the protective cap. According to the invention it is provided that the shaping device is displaceable axially with respect to the lead when the protective cap is fitted. (FIG. **1**)
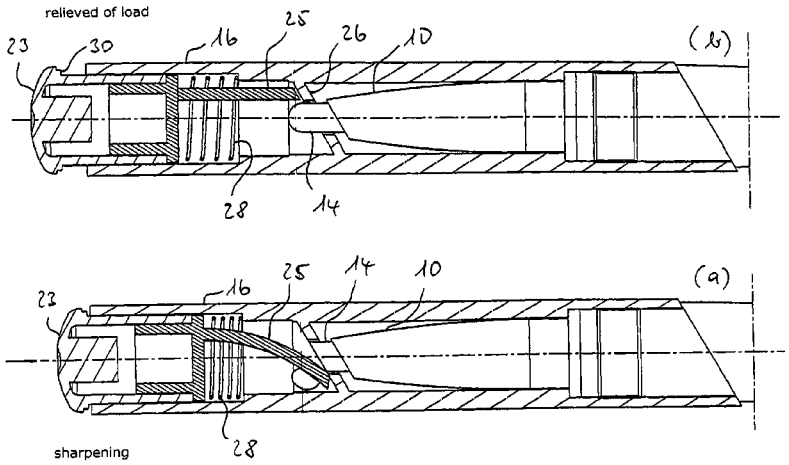
15 Claims, 4 Drawing Sheets