Aug. 10, 1954 H. S. HOENES 2,686,153

APPARATUS FOR GENERATING HYDROGEN AND OXYGEN

Filed June 30, 1952

Fig. 1.

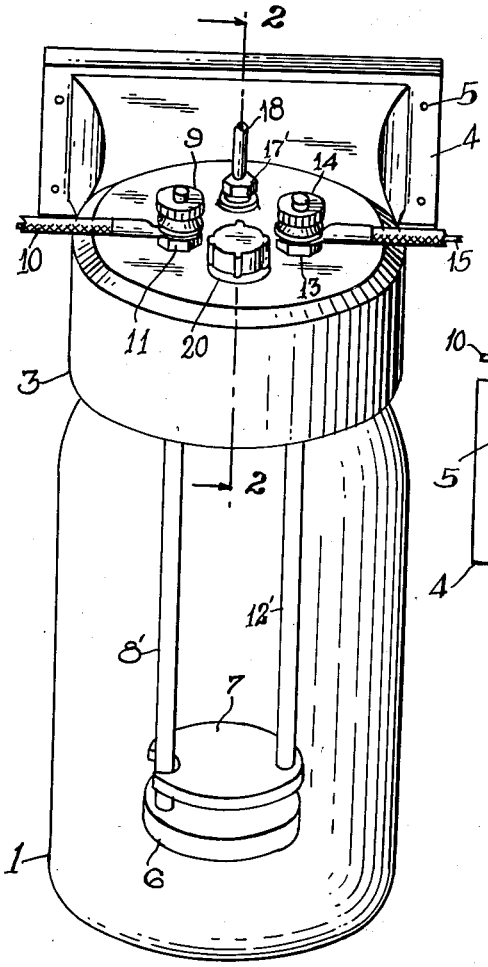

Fig. 2.

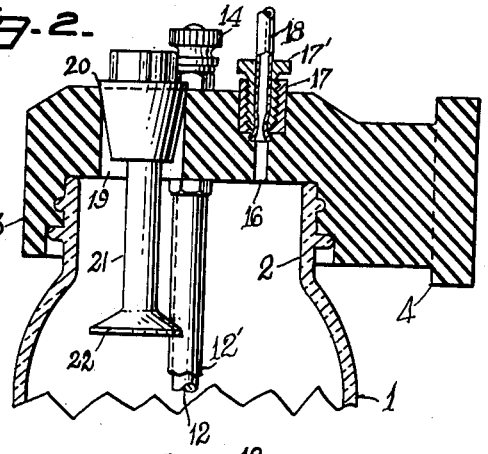

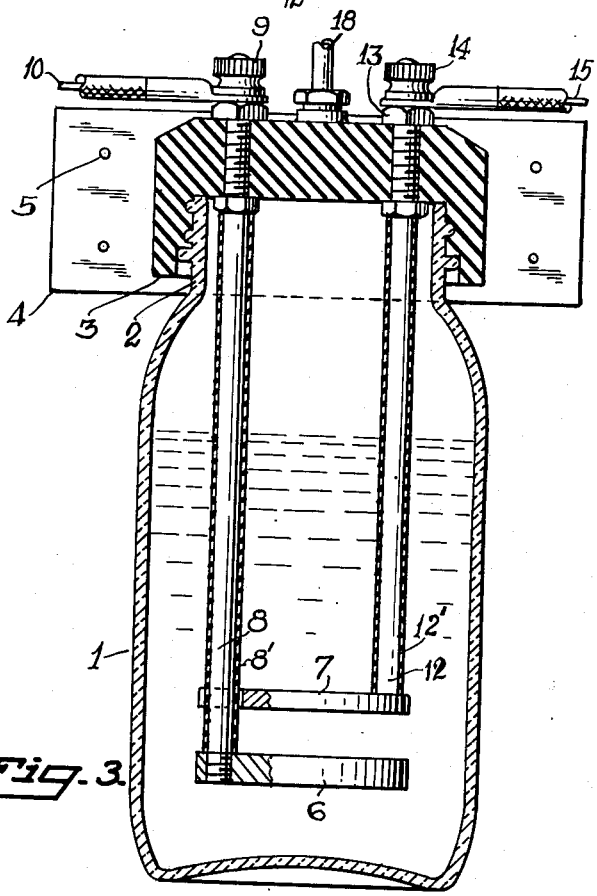

Fig. 3.

INVENTOR.
HARRY S. HOENES
BY
J. E. Trabucco.
ATTORNEY