FIG. 1

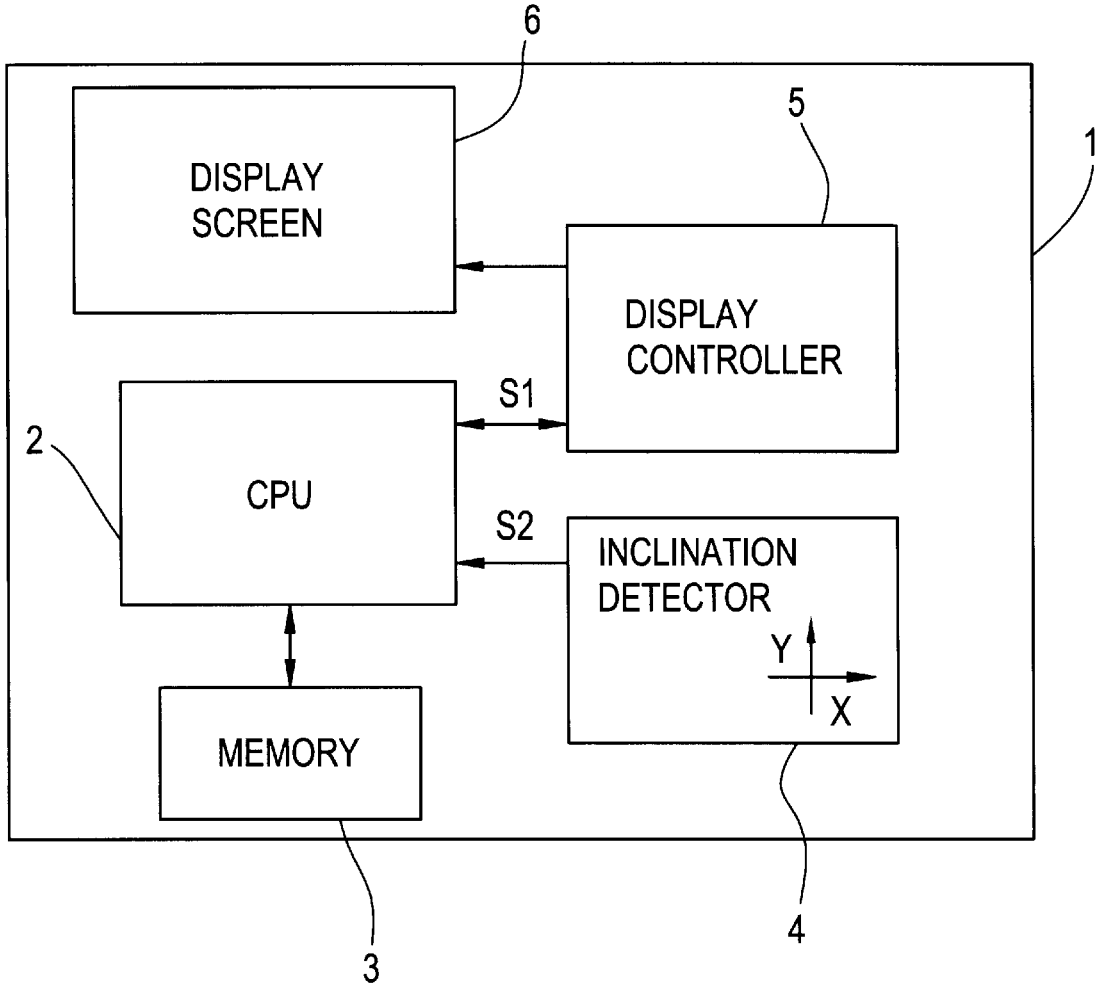
6
5
1
DISPLAY SCREEN
DISPLAY CONTROLLER
S1
2
CPU
S2
INCLINATION DETECTOR
Y
X
MEMORY
3
4