Nov. 4, 1958 G. W. HARRELL 2,858,953

DRY WALL JOINT TAPING APPARATUS

Filed May 28, 1956 3 Sheets-Sheet 1

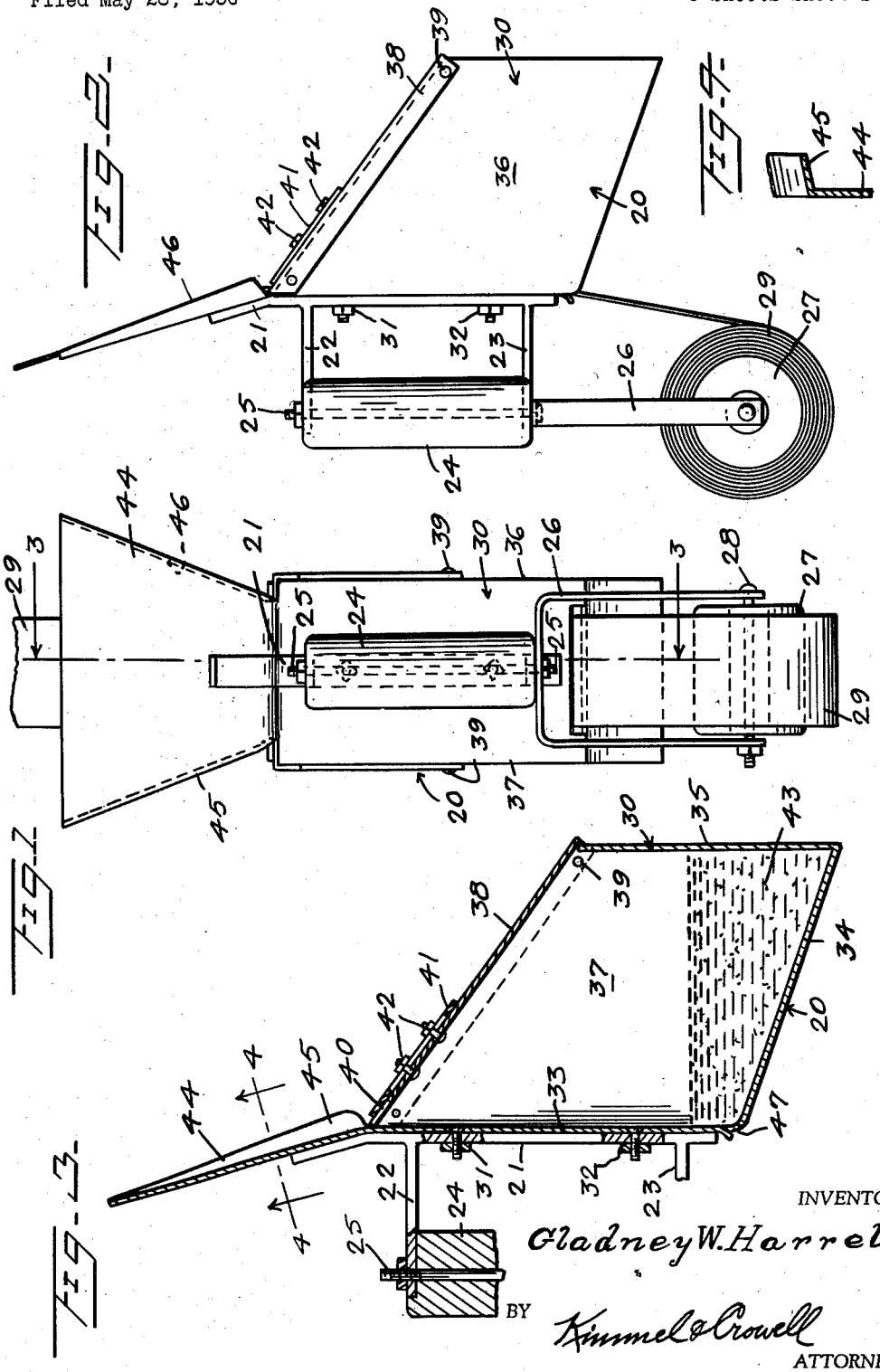

INVENTOR

Gladney W. Harrell

BY Kimmel & Crowell

ATTORNEYS