US009543453B2

(12) **United States Patent**
Arai

(10) **Patent No.: US 9,543,453 B2**
(45) **Date of Patent: Jan. 10, 2017**

(54) **SEMICONDUCTOR DEVICE INCLUDING JUNCTION FIELD EFFECT TRANSISTOR AND METHOD OF MANUFACTURING THE SAME**

(71) Applicant: **Renesas Electronics Corporation**, Kawasaki-shi (JP)

(72) Inventor: **Koichi Arai**, Kawasaki (JP)

(73) Assignee: **RENESAS ELECTRONICS CORPORATION**, Kawasaki-Shi, Kanagawa (JP)

(*) Notice: Subject to any disclaimer, the term of this patent is extended or adjusted under 35 U.S.C. 154(b) by 52 days.

(21) Appl. No.: **14/469,799**

(22) Filed: **Aug. 27, 2014**

(65) **Prior Publication Data**

US 2015/0214385 A1 Jul. 30, 2015

(30) **Foreign Application Priority Data**

Jan. 24, 2014 (JP) 2014-010876

(51) **Int. Cl.**

H01L 29/808	(2006.01)
H01L 29/66	(2006.01)
H01L 29/10	(2006.01)
H01L 29/16	(2006.01)
H01L 21/04	(2006.01)

(52) **U.S. Cl.**

CPC ***H01L 29/8083*** (2013.01); ***H01L 21/046*** (2013.01); ***H01L 29/1066*** (2013.01); ***H01L 29/1608*** (2013.01); ***H01L 29/66068*** (2013.01); *H01L 29/1058* (2013.01); *H01L 29/66909* (2013.01)

(58) **Field of Classification Search**

CPC H01L 29/66909

See application file for complete search history.

(56) **References Cited**

U.S. PATENT DOCUMENTS

7,211,845	B1 *	5/2007	Yu	H01L 29/1029 257/263
2005/0067630	A1	3/2005	Zhao	
2006/0197105	A1	9/2006	Carta et al.	
2010/0163935	A1	7/2010	Shimizu et al.	
2014/0231883	A1 *	8/2014	Esteve	H01L 29/66909 257/265

FOREIGN PATENT DOCUMENTS

JP	2010-147405 A	7/2010

OTHER PUBLICATIONS

Extended European Search Report dated May 27, 2015.

* cited by examiner

Primary Examiner — Stephen W Smoot

(74) *Attorney, Agent, or Firm* — McGinn IP Law Group, PLLC.

(57) **ABSTRACT**

An on-resistance of a junction FET is reduced. In a semiconductor device in an embodiment, a gate region of the junction field effect transistor includes a low concentration gate region and a high concentration gate region whose impurity concentration is higher than an impurity concentration of the low concentration gate region, and the high concentration gate region is included in the low concentration gate region.
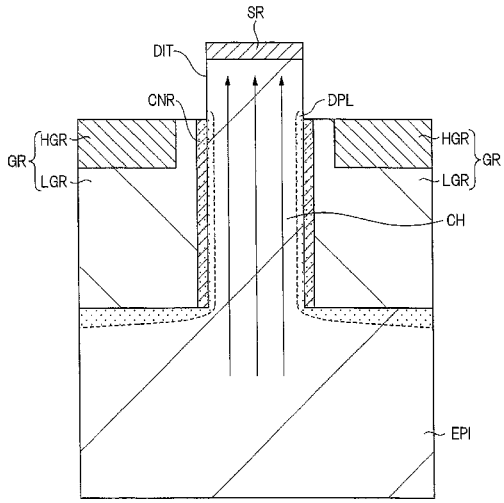
11 Claims, 16 Drawing Sheets