US005243453A

United States Patent [19]

Kawaguchi et al.

[11] Patent Number: 5,243,453

[45] Date of Patent: Sep. 7, 1993

[54] ANTI-MOISTURE STRUCTURES FOR USE WITH A LIQUID CRYSTAL DISPLAY

[75] Inventors: **Takuo Kawaguchi**, Chicago, Ill.; **Tetsuo Ishikawa**, Hitachi; **Yoshiaki Takeda**, Hitachi; **Kousuke Yamada**, Hitachi, all of Japan

[73] Assignee: **Hitachi, Ltd.**, Tokyo, Japan

[21] Appl. No.: **664,221**

[22] Filed: **Mar. 4, 1991**

[30] **Foreign Application Priority Data**

Mar. 2, 1990 [JP] Japan 2-049317

[51] **Int. Cl.**[5] **G02F 1/1333**; G02F 1/1343

[52] **U.S. Cl.** **359/74**; 359/83; 359/88

[58] **Field of Search** 359/83, 88, 74

[56] **References Cited**

U.S. PATENT DOCUMENTS

4,111,533	9/1978	Nakamura et al.	359/83
4,189,912	2/1980	Washizuka et al.	359/83 X
4,221,112	9/1980	Enomoto et al.	359/83 X
4,243,302	1/1981	Hanner	359/50 X
4,247,928	1/1981	Dorfman	359/83 X
4,294,517	10/1981	Jakubek	359/83
4,403,830	9/1983	Gerstner	359/89
4,614,406	9/1986	Motoi	359/83 X
4,643,526	2/1987	Watanabe et al.	359/88
4,709,991	12/1987	Hoshikawa	359/74 X
4,756,105	7/1988	Wagner et al.	359/83 X
4,763,493	8/1988	Nishite et al.	340/525
4,809,078	2/1989	Yabe et al.	359/83 X
4,842,373	6/1989	Tomofuji et al.	359/88
4,906,071	3/1990	Takahara et al.	359/82

FOREIGN PATENT DOCUMENTS

59-140424	8/1984	Japan	359/83
63-64022	3/1988	Japan	359/83
1-49022	2/1989	Japan	359/83
1-245225	9/1989	Japan	359/83
2-58023	2/1990	Japan	359/80

OTHER PUBLICATIONS

"Mounting Method for Liquid Crystal Display", IBM Technical Disclosure Bulletin, vol. 29 No. 8, Jan. 1987, pp. 3446–3447.

Primary Examiner—William L. Sikes
Assistant Examiner—Ron Trice
Attorney, Agent, or Firm—Antonelli, Terry, Stout & Kraus

[57] **ABSTRACT**

In the invention, an outer case is formed of a transmissive hard synthetic resin, a liquid crystal display board is housed in the outer case in a floating state relative to an inner bottom surface of the outer case, and the liquid crystal display board is surrounded with a transmissive synthetic resin poured into the outer case so that anti-moisture resistance is improved.
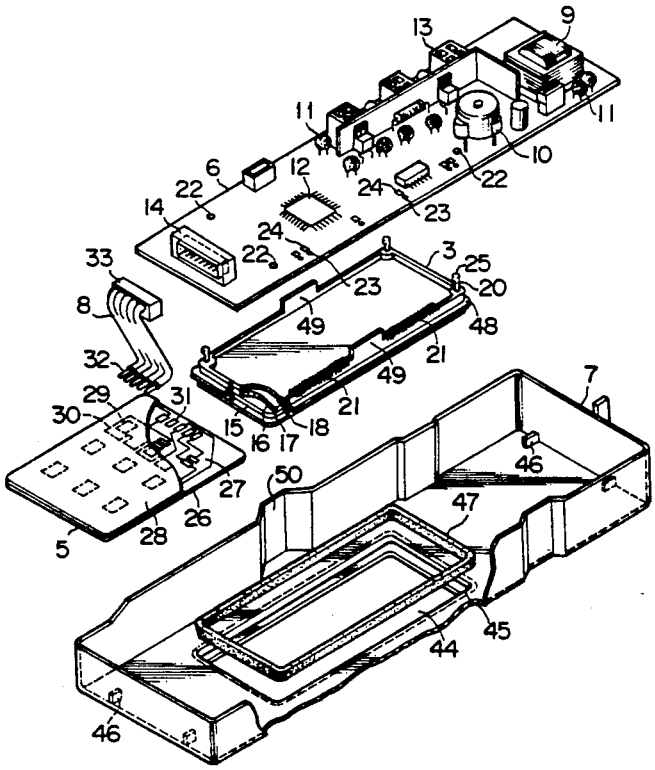
19 Claims, 8 Drawing Sheets