May 5, 1964 G. E. DIXON 3,131,753

FOLDING DOOR WITH FLEXIBLE JOINT

Filed July 21, 1960 2 Sheets-Sheet 1

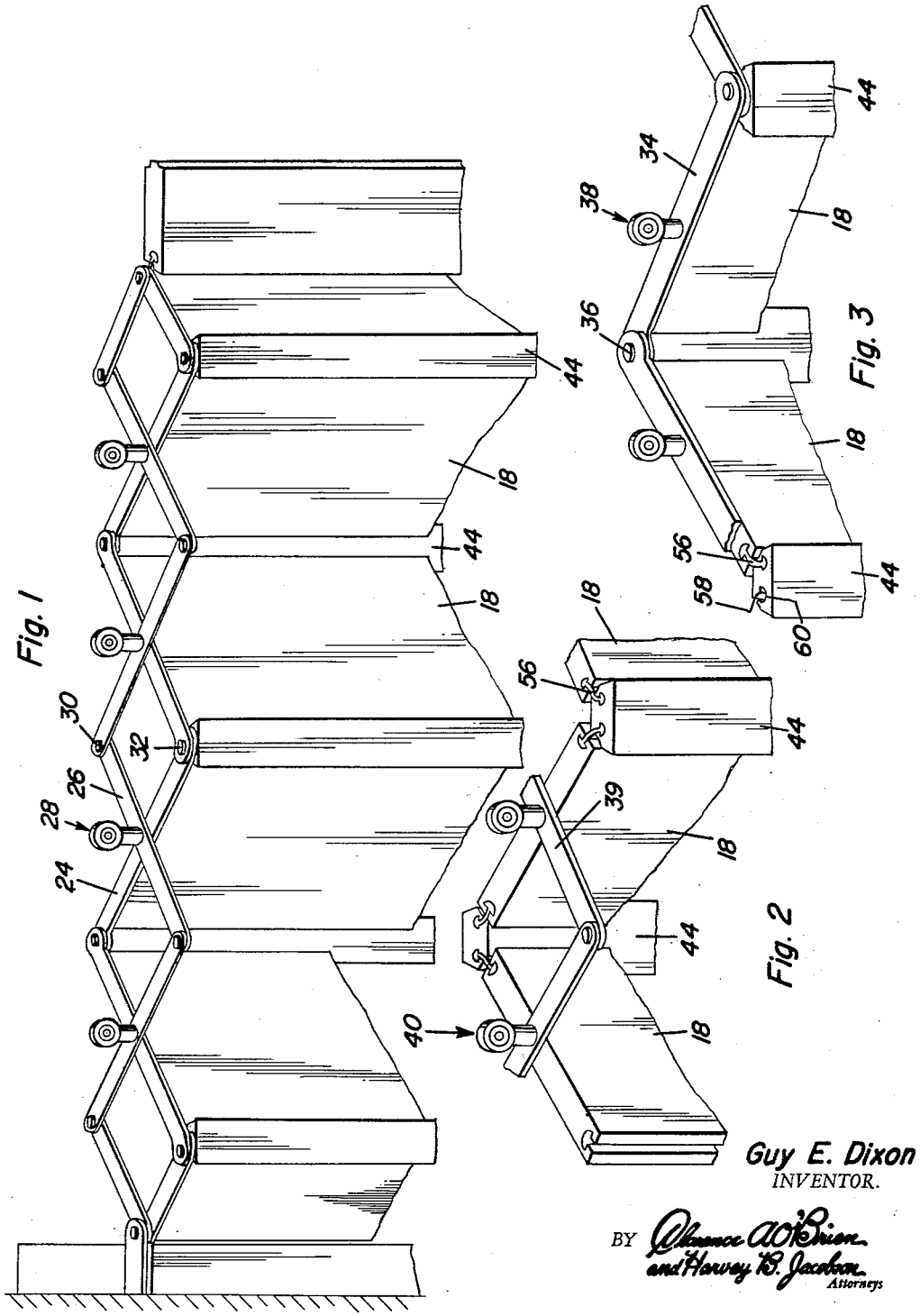

Guy E. Dixon
INVENTOR.

BY Clarence A. O'Brien and Harvey B. Jacobson
Attorneys