US005217053A

United States Patent [19]

Foster et al.

[11] Patent Number: 5,217,053

[45] Date of Patent: Jun. 8, 1993

[54] VENTED VACUUM SEMICONDUCTOR WAFER CASSETTE

[75] Inventors: Leonard W. Foster, Richardson; Edwin G. Millis, Dallas, both of Tex.

[73] Assignee: Texas Instruments Incorporated, Dallas, Tex.

[21] Appl. No.: 885,109

[22] Filed: May 18, 1992

Related U.S. Application Data

[62] Division of Ser. No. 475,556, Feb. 5, 1990, Pat. No. 5,137,063.

[51] Int. Cl.[5] H05K 1/00

[52] U.S. Cl. 141/98; 141/286; 141/302; 414/217; 250/441.11; 206/334; 206/524.8

[58] Field of Search 141/65, 66, 85, 98, 141/286, 302, 383, 386; 414/217, 221, 292; 250/441.11, 492.21; 206/328, 334, 454, 455, 524.8

[56] References Cited

U.S. PATENT DOCUMENTS

3,943,987	3/1976	Rossi	206/524.8
3,949,891	4/1976	Butler et al.	206/334 X
4,027,707	6/1977	Maskell	141/66
4,066,401	1/1978	Solomon	206/524.8
4,181,161	1/1980	Kraus	141/65 X
4,616,683	10/1986	Tullis et al.	141/98
4,724,874	2/1988	Parikh et al.	141/98
4,739,882	4/1988	Parikh et al.	206/454
4,797,054	1/1989	Arii	414/217
4,969,556	11/1990	Ishimaru et al.	206/524.8
4,987,933	1/1991	Mack	250/441.11 X

FOREIGN PATENT DOCUMENTS

0111469	of 1898	Fed. Rep. of Germany	141/85
2282087	11/1990	Japan	206/334
0398878	4/1991	Japan	206/524.8

Primary Examiner—Henry J. Recla
Assistant Examiner—Casey Jacyna
Attorney, Agent, or Firm—W. James Brady, III; B. Peter Barndt; Richard L. Donaldson

[57] ABSTRACT

A vacuum storage cassette for semiconductor wafers has one or more valves to allow the cassette to be evacuated, backfilled, and opened to the surround atmosphere and resealed without the need for a vacuum load-lock chamber.
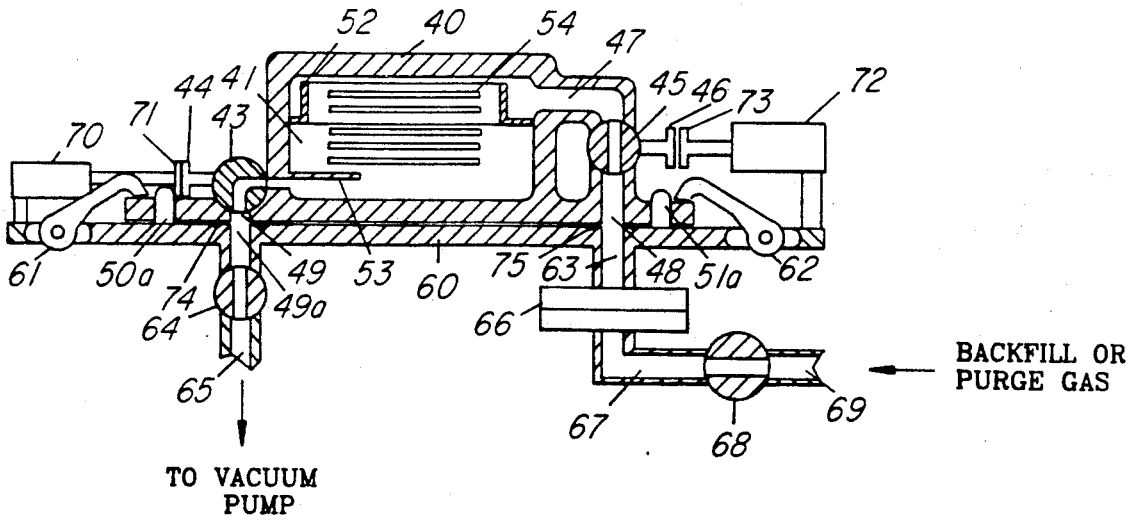
10 Claims, 4 Drawing Sheets