US009411153B2

(12) **United States Patent**
Hartwig et al.

(10) **Patent No.: US 9,411,153 B2**
(45) **Date of Patent: Aug. 9, 2016**

(54) **PHOSPHOR WHEEL AND ILLUMINATION DEVICE COMPRISING THIS PHOSPHOR WHEEL AND A PUMP LIGHT SOURCE**

(71) Applicant: **OSRAM GMBH**, Munich (DE)

(72) Inventors: **Ulrich Hartwig**, Berlin (DE); **Martin Daniels**, Berlin (DE)

(73) Assignee: **OSRAM GmbH**, Munich (DE)

(*) Notice: Subject to any disclaimer, the term of this patent is extended or adjusted under 35 U.S.C. 154(b) by 135 days.

(21) Appl. No.: **14/260,165**

(22) Filed: **Apr. 23, 2014**

(65) **Prior Publication Data**

US 2014/0333901 A1 Nov. 13, 2014

(30) **Foreign Application Priority Data**

May 8, 2013 (DE) 10 2013 208 549

(51) **Int. Cl.**

G02B 26/00	(2006.01)
F21V 14/08	(2006.01)
G03B 21/14	(2006.01)
G03B 21/20	(2006.01)
G03B 33/08	(2006.01)
H04N 9/31	(2006.01)

(52) **U.S. Cl.**

CPC ***G02B 26/008*** (2013.01); ***F21V 14/08*** (2013.01); ***G03B 21/142*** (2013.01); ***G03B 21/204*** (2013.01); ***G03B 33/08*** (2013.01); ***H04N 9/3158*** (2013.01)

(58) **Field of Classification Search**

CPC G03B 21/204; G03B 21/2033

See application file for complete search history.

(56) **References Cited**

U.S. PATENT DOCUMENTS

2010/0245777	A1	9/2010	Ogura	
2011/0116253	A1*	5/2011	Sugiyama	F21S 10/007 362/84
2012/0106126	A1*	5/2012	Nojima	G02B 26/008 362/84
2013/0002972	A1*	1/2013	Tanaka	G02B 27/1046 349/8
2013/0050654	A1*	2/2013	Hu	G03B 33/06 353/31
2013/0100417	A1*	4/2013	Yang	G03B 21/204 353/31
2013/0329421	A1*	12/2013	Finsterbusch	G02B 23/2469 362/231

* cited by examiner

Primary Examiner — Sultan Chowdhury

(74) *Attorney, Agent, or Firm* — Cozen O'Connor

(57) **ABSTRACT**

The invention provides an illumination device comprising a pump light source and a phosphor wheel. The phosphor wheel comprises at least two segmented phosphor layers. The front surfaces of the phosphor layers do not form a common plane, but instead a kind of relief in which the surfaces of the phosphor layers extend in different imaginary planes. When the phosphor wheel rotates through a beam waist of the pump. light, in this way the size of the pump light spot and therefore also the power density distribution of the pump light on the respective phosphor layer are adapted.
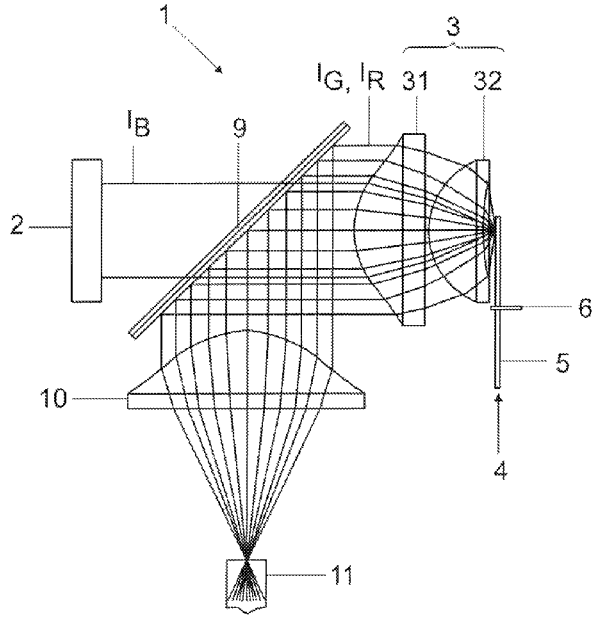
21 Claims, 6 Drawing Sheets