US009408753B2

(12) **United States Patent**
Song et al.

(10) **Patent No.: US 9,408,753 B2**
(45) **Date of Patent: *Aug. 9, 2016**

(54) **ABSORBENT ARTICLE WITH COLOR MATCHED SURFACES**

(71) Applicant: **The Procter & Gamble Company**, Cincinnati, OH (US)

(72) Inventors: **Limin Song**, Beijing (CN); **Kesyin Fugger Hsueh**, Singapore (SG); **Walter Douglas Daniels**, Maineville, OH (US); **John Joseph Litchholt**, Lawrenceburg, IN (US)

(73) Assignee: **The Procter & Gamble Company**, Cincinnati, OH (US)

(*) Notice: Subject to any disclaimer, the term of this patent is extended or adjusted under 35 U.S.C. 154(b) by 0 days.

This patent is subject to a terminal disclaimer.

(21) Appl. No.: **14/950,629**

(22) Filed: **Nov. 24, 2015**

(65) **Prior Publication Data**

US 2016/0074235 A1 Mar. 17, 2016

Related U.S. Application Data

(63) Continuation of application No. 10/903,004, filed on Jul. 30, 2004, now Pat. No. 9,226,857.

(51) **Int. Cl.**
A61F 13/15 (2006.01)
A61F 13/20 (2006.01)

(52) **U.S. Cl.**
CPC . ***A61F 13/15203*** (2013.01); *A61F 2013/15243* (2013.01)

(58) **Field of Classification Search**
CPC A61F 13/15203
USPC 604/367, 375, 385.01
See application file for complete search history.

(56) **References Cited**

U.S. PATENT DOCUMENTS

3,848,594	A	11/1974	Buell
3,860,003	A	1/1975	Buell
3,863,636	A	2/1975	Johnson
3,911,173	A	10/1975	Sprague, Jr.
3,929,135	A	12/1975	Thompson

(Continued)

FOREIGN PATENT DOCUMENTS

GB	2227666	A	8/1990
JP	05-053625	U	7/1993

(Continued)

OTHER PUBLICATIONS

U.S. Appl. No. 10/903,221, filed Jul. 30, 2004, All Office Actions and Responses beginning May 4, 2006 to Aug. 17, 2010.

(Continued)

Primary Examiner — Michele M Kidwell
(74) *Attorney, Agent, or Firm* — Sarah M. DeCristofaro; Eric T. Addington

(57) **ABSTRACT**

A disposable absorbent article comprising a front waist region, a rear waist region, and a crotch region, wherein said absorbent article further comprises at least three discrete elements each comprising at least one visible surface; wherein at least three or more of the visible surfaces comprise an imparted color wherein said colors are color matched. Color matching exists when said colors are contained within a specified CIELab color space volume, have a specified hue difference, or total color difference.
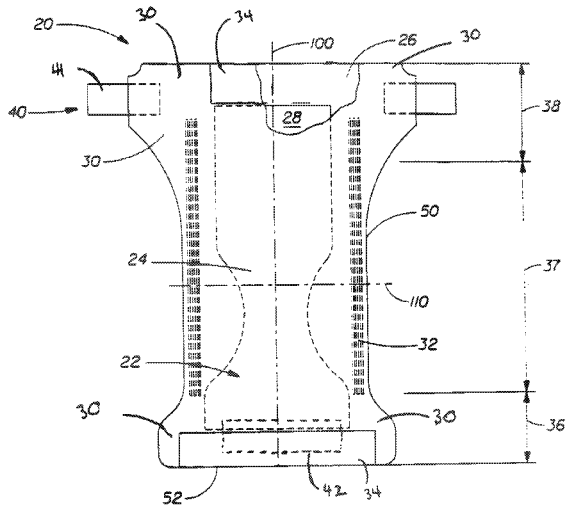
20 Claims, 2 Drawing Sheets