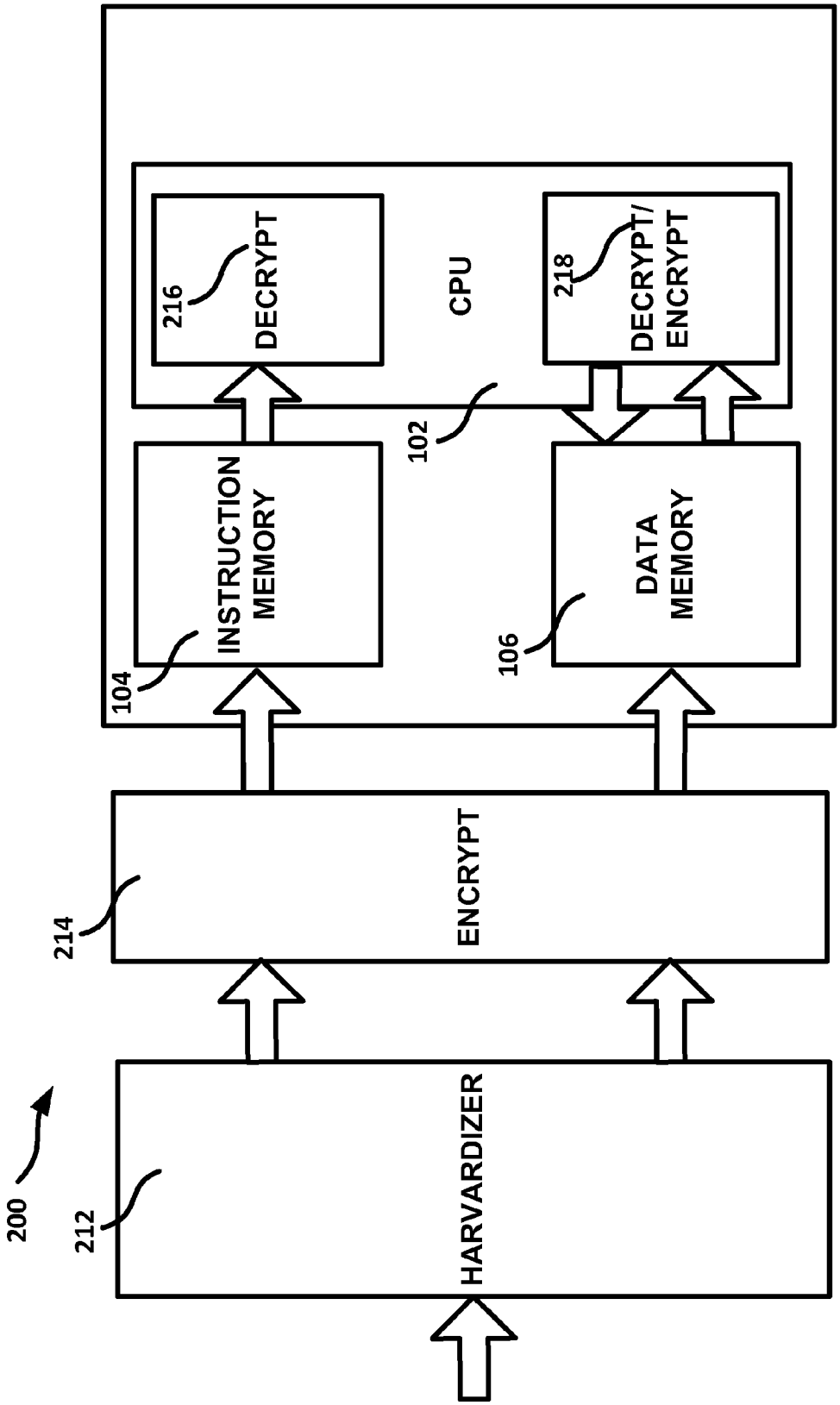
200
212
HARVARDIZER
214
ENCRYPT
104
INSTRUCTION MEMORY
216
DECRYPT
CPU
102
106
DATA MEMORY
218
DECRYPT/ ENCRYPT

FIG. 2