March 7, 1967 M. KRAKINOWSKI 3,308,253

DIAPHRAGM SWITCH HAVING A DIAPHRAGM SUPPORTED ON AN INCOMPRESSIBLE LAYER AND AN ELASTOMER OVERLAYING THE DIAPHRAGM

Filed March 25, 1965

FIG. 1

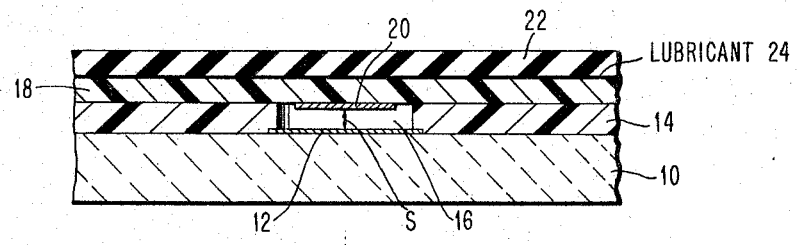

FIG. 2

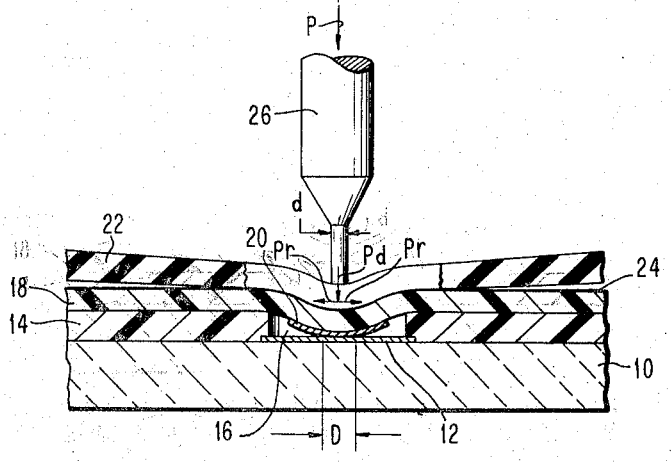

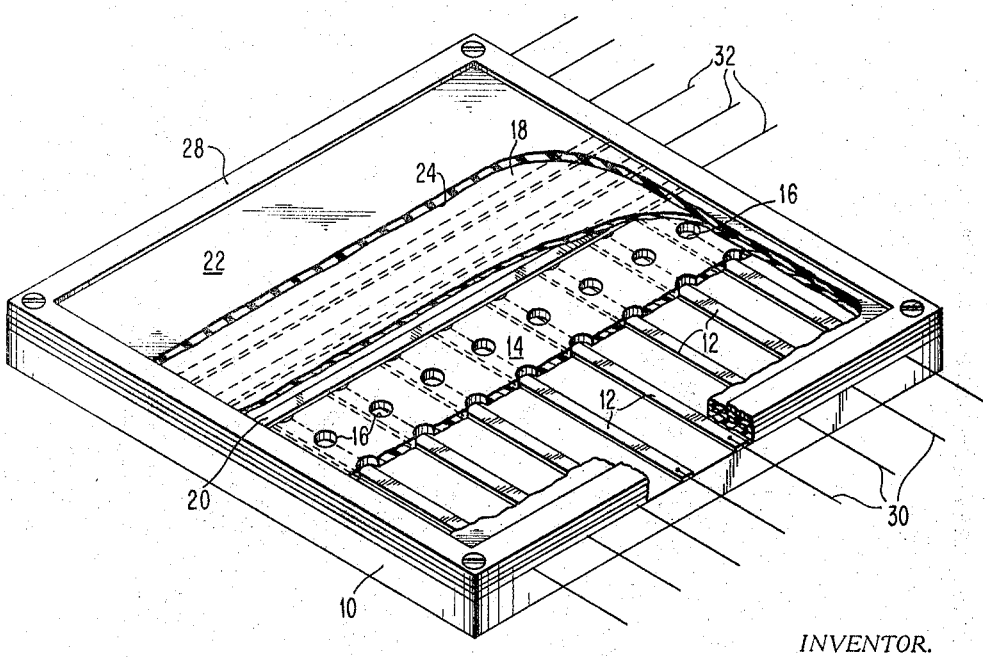

FIG. 3

INVENTOR.
MORRIS KRAKINOWSKI

BY Ronald J. Kranzoby
ATTORNEY