United States Patent [19]

Mayo et al.

[11] **Patent Number: Des. 306,853**

[45] **Date of Patent: *** Mar. 27, 1990**

[54] **TRANSMITTER FOR WIRELESS LIGHT SWITCHING SYSTEM**

[75] Inventors: **Noel Mayo**, Philadelphia; **Joel S. Spira**, Coopersburg, both of Pa.; **Raphael K. T. Tang**, Belmont, Mass.

[73] Assignee: **Lutron Electronics Co., Inc.**, Coopersburg, Pa.

[*] Notice: The portion of the term of this patent subsequent to Sep. 26, 2003 has been disclaimed.

[**] Term: **14 Years**

[21] Appl. No.: **79,862**

[22] Filed: **Jul. 30, 1987**

[52] **U.S. Cl.** **D13/38**

[58] **Field of Search** D14/85, 99, 68; D13/11, D13/12, 32, 40–41, 99; 315/224, 291, 295, 239; 362/257; 340/825.71–825.73; 455/603

[56] **References Cited**

U.S. PATENT DOCUMENTS

D. 167,828 9/1952 Florac D14/68
D. 280,896 10/1985 Campbell et al. D14/95
D. 290,356 6/1987 Fisher D14/95

OTHER PUBLICATIONS

Hong Kong Enterprise, 11/1984, p. 321, "Brighten Electronics, Co. Remote Control Devices".
Hong Kong Enterprise, 1/1985, p. 329, "Clover Electric Co. Ltd. Remote Controls".

Primary Examiner—Bruce W. Dunkins
Assistant Examiner—Ruth Takemoto
Attorney, Agent, or Firm—Seidel, Gonda, Lavorgna & Monaco

[57] **CLAIM**

The ornamental design for a transmitter for wireless light switching system, as shown and described.

DESCRIPTION
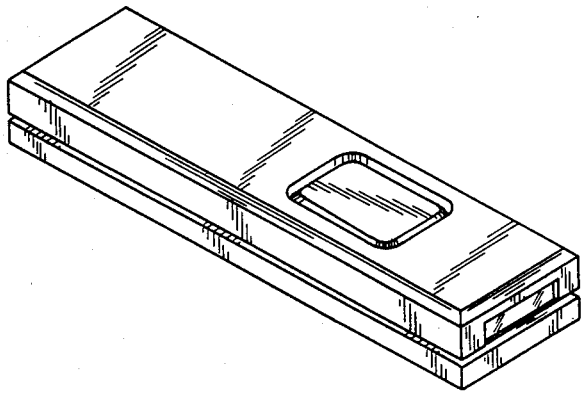
FIG. **1** is a perspective view of a transmitter for a wireless light dimmer system showing our new design;
FIG. **2** is a top plan view thereof;
FIG. **3** is a bottom plan view thereof;
FIG. **4** is a side elevational view thereof;
FIG. **5** is an end elevational view thereof; and
FIG. **6** is an end elevational view thereof, of the opposite side of FIG. **5**.