110-

3

Feb. 22, 1955 R. L. DICKEY 2,702,753

FOAMED MAGNESIA TILE AND ITS METHOD OF PRODUCTION 207,305

Filed Jan. 23, 1951

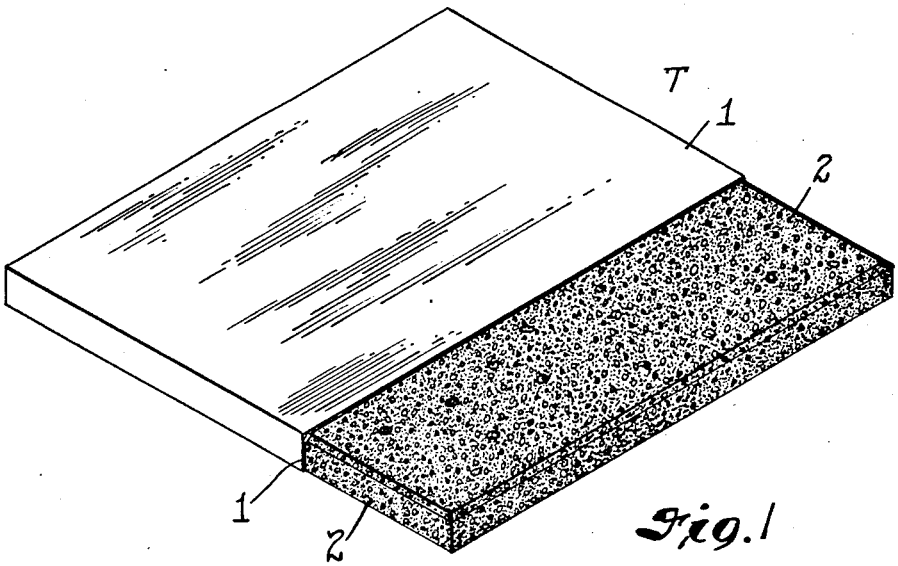

Fig. 1

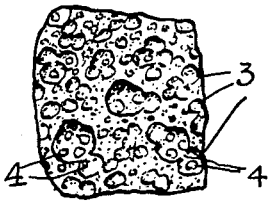

Fig. 2

INVENTOR.
RALPH L. DICKEY
BY
Oberlin & Limbach
ATTORNEYS.