Sept. 1, 1959 P. J. SPERZEL 2,901,753

PRE-SET SUSTAINING HINGE FOR TOILET SEATS

Filed July 5, 1956

FIG. 1

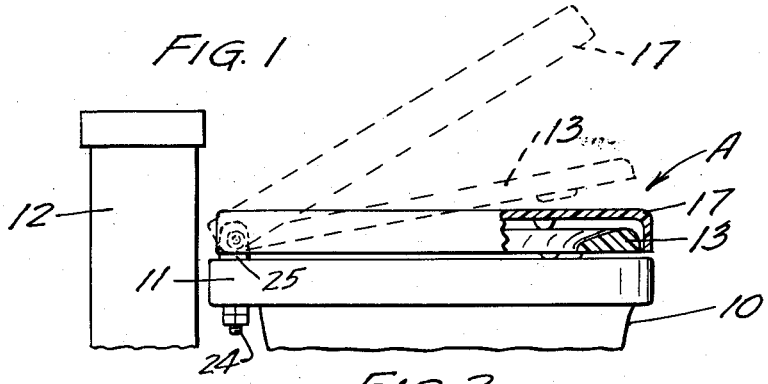

FIG. 2

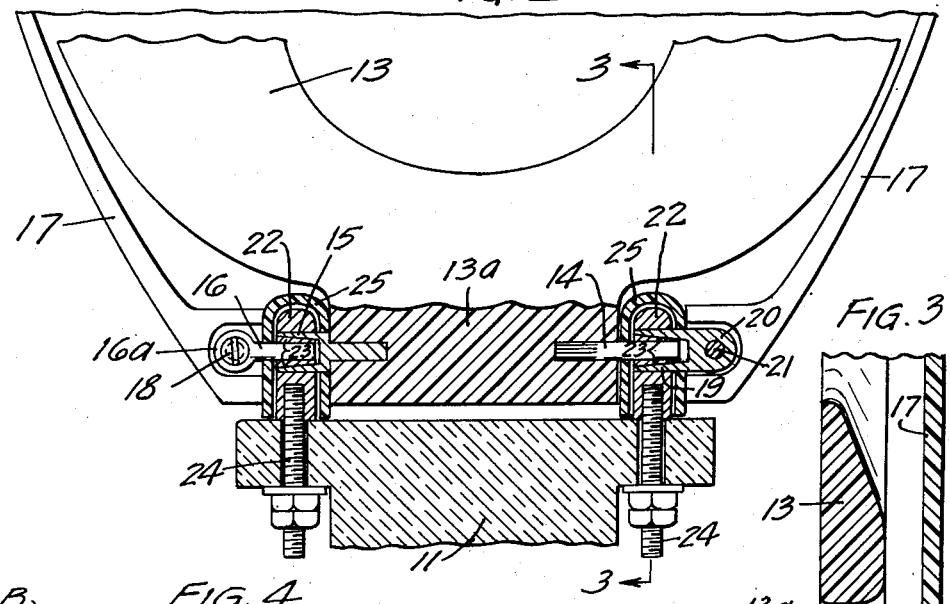

FIG. 3

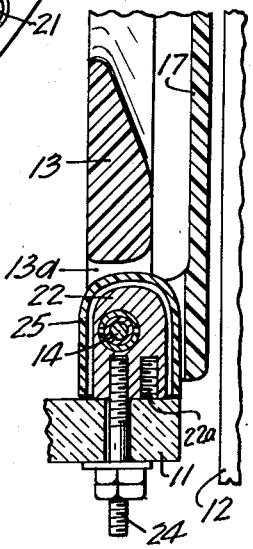

FIG. 4

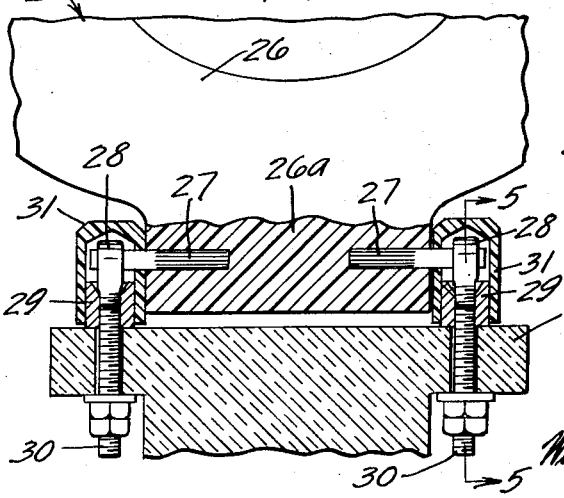

FIG. 5

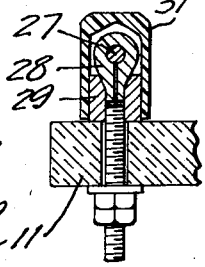

INVENTOR.
PETER J. SPERZEL
BY
Williamson, Schroeder, Adams & Meyers
ATTORNEYS