US00D396452S

United States Patent [19]

Naruki

[11] Patent Number: Des. 396,452

[45] Date of Patent: **Jul. 28, 1998

[54] **PORTABLE CHARACTER AND IMAGE PROCESSING APPARATUS**

[75] Inventor: **Masatomo Naruki**, Kanagawa-ken, Japan

[73] Assignee: **Kabushiki Kaisha Toshiba**, Kawasaki, Japan

[**] Term: **14 Years**

[21] Appl. No.: **75,721**

[22] Filed: **Jul. 29, 1997**

Related U.S. Application Data

[63] Continuation of Ser. No. 63,554, Dec. 10, 1996, abandoned.

[30] **Foreign Application Priority Data**

Jul. 11, 1996 [JP] Japan 8-20493

[51] **LOC (6) Cl.** **14-02**

[52] **U.S. Cl.** **D14/107**

[58] **Field of Search** ..... D14/100, 106, D14/107, 114, 115; D18/1, 2, 7; 178/18, 19; 235/145 A, 145 R; 341/22, 23; 345/156, 168, 169, 172, 173, 87; 364/708.1

[56] **References Cited**

U.S. PATENT DOCUMENTS

D. 270,061	8/1983	Ackeret	D16/11
D. 270,062	8/1983	Ackeret	D16/11
D. 270,063	8/1983	Ackeret	D16/11
D. 289,873	5/1987	Gemmell et al.	D14/113
D. 315,549	3/1991	Clough et al.	D14/100
D. 317,151	5/1991	Daly	D14/100
D. 319,433	8/1991	Pearce	D14/100
D. 322,246	12/1991	Izaki	D14/100
D. 324,673	3/1992	Iino	D14/106
D. 332,776	1/1993	Kelly et al.	D14/100
D. 337,569	7/1993	Kando	D14/100
D. 340,701	10/1993	Takeuchi	D14/100
D. 341,823	11/1993	Sakai	D14/100
D. 345,346	3/1994	Alfonso et al.	D14/100
D. 346,366	4/1994	Kim et al.	D14/100
D. 346,793	5/1994	Iino et al.	D14/100
D. 362,662	9/1995	Baudot	D14/100
D. 373,118	8/1996	Naruki	D14/100

OTHER PUBLICATIONS

Sharp PA-Z500 Aug. 16, 1995.
NEC DB-P1 Jun. 29, 1994.
News Release, (PA-Z500), Sharp Kabushiki Kaisha, Aug. 16, 1995.
Catalog, (DB-P1), Nippon Electric Company, Ltd. (NEC), Jun. 29, 1994.
Palmtop.
XTEND, May 20, 1993 (obtained by applicant).
Palmtop, publication date unknown.
XTEND PN10, publication date unknown.

Primary Examiner—Freda Nunn
Attorney, Agent, or Firm—Banner & Witcoff, Ltd.

[57] **CLAIM**

The ornamental design for a portable character and image processing apparatus, as shown and described.

DESCRIPTION

FIG. **1** is a top, front and right side perspective view of a portable character and image processing apparatus showing my new design;
FIG. **2** is a front elevational view thereof;
FIG. **3** is a rear elevational view thereof;
FIG. **4** is a top plan view thereof;
FIG. **5** is a bottom plan view thereof;
FIG. **6** is a left side elevational view thereof; and,
FIG. **7** is a right side elevational view thereof.
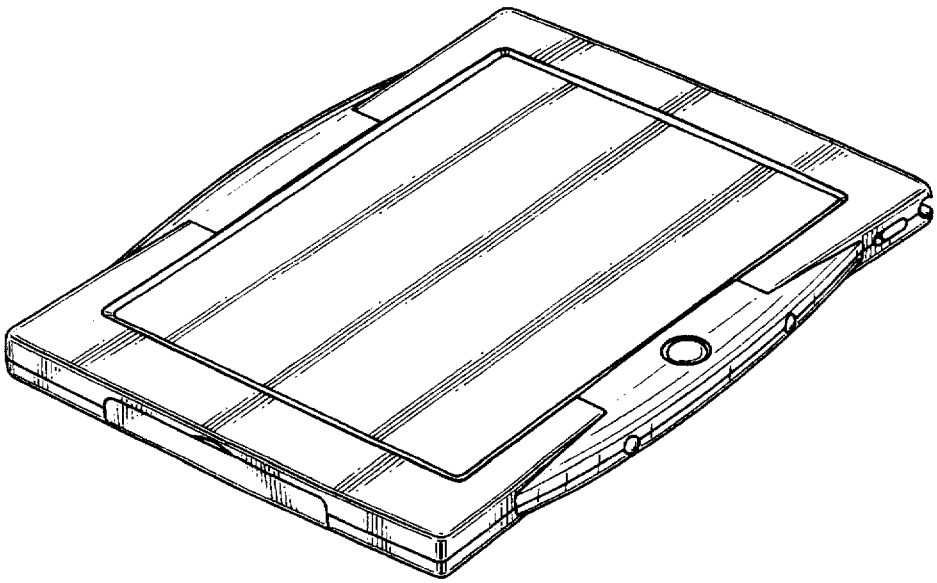
1 Claim, 3 Drawing Sheets