US005388452A

United States Patent [19]

Harp et al.

[11] Patent Number: 5,388,452

[45] Date of Patent: Feb. 14, 1995

[54] DETECTION SYSTEM FOR ATOMIC FORCE MICROSCOPES

[75] Inventors: **Robert S. Harp**, Westlake Village; **David J. Ray**, Agoura Hills, both of Calif.

[73] Assignee: **Quesant Instrument Corporation**, Agoura Hills, Calif.

[21] Appl. No.: **137,625**

[22] Filed: **Oct. 15, 1993**

[51] **Int. Cl.**[6] **G01B 5/28**; H01J 37/26

[52] **U.S. Cl.** **73/105**; 250/306; 250/307

[58] **Field of Search** ..... 73/105; 250/306, 307, 250/423 F

[56] **References Cited**

U.S. PATENT DOCUMENTS

4,837,435	6/1989	Sakuhara et al.	250/306
5,025,658	6/1991	Elings et al.	73/105
5,144,833	9/1992	Amer et al.	73/105
5,189,906	3/1993	Elings et al.	73/105
5,196,713	3/1993	Marshall	250/306
5,245,863	9/1993	Kajimura et al.	73/105
5,267,471	12/1993	Abraham et al.	250/307
5,280,341	1/1994	Nonnenmacher et al.	250/306
5,286,977	2/1994	Yokoyama et al.	250/306
5,289,004	2/1994	Okada et al.	250/306

OTHER PUBLICATIONS

"Novel Stationary-Sample Atomic Force Microscope With Beam Tracking Lens" P. S. Jung, D. R. Yaniv-Electronic Letters vol. 29, No. 3, pp. 264-265 (4 Feb. 1993).

Primary Examiner—Hezron E. Williams
Assistant Examiner—George M. Dombroske
Attorney, Agent, or Firm—Marvin H. Kleinberg

[57] **ABSTRACT**

A scanning probe microscope is provided with a piezoceramic tube to carry the sensitive probe at its free end to translationally move the probe in the X and Y directions. Large stationary surfaces can then be scanned by probe tip motion. The tube is also capable of movement in the Z direction so that the tip can follow the contours of the surface. Optical detection means track the motion of the probe tip and generate signals corresponding to and representative of surface contours. In one mode of operation, the signals are used in a feed back loop to keep constant the spacing between the tip and the surface, in which case the error or control signals represent the contours.
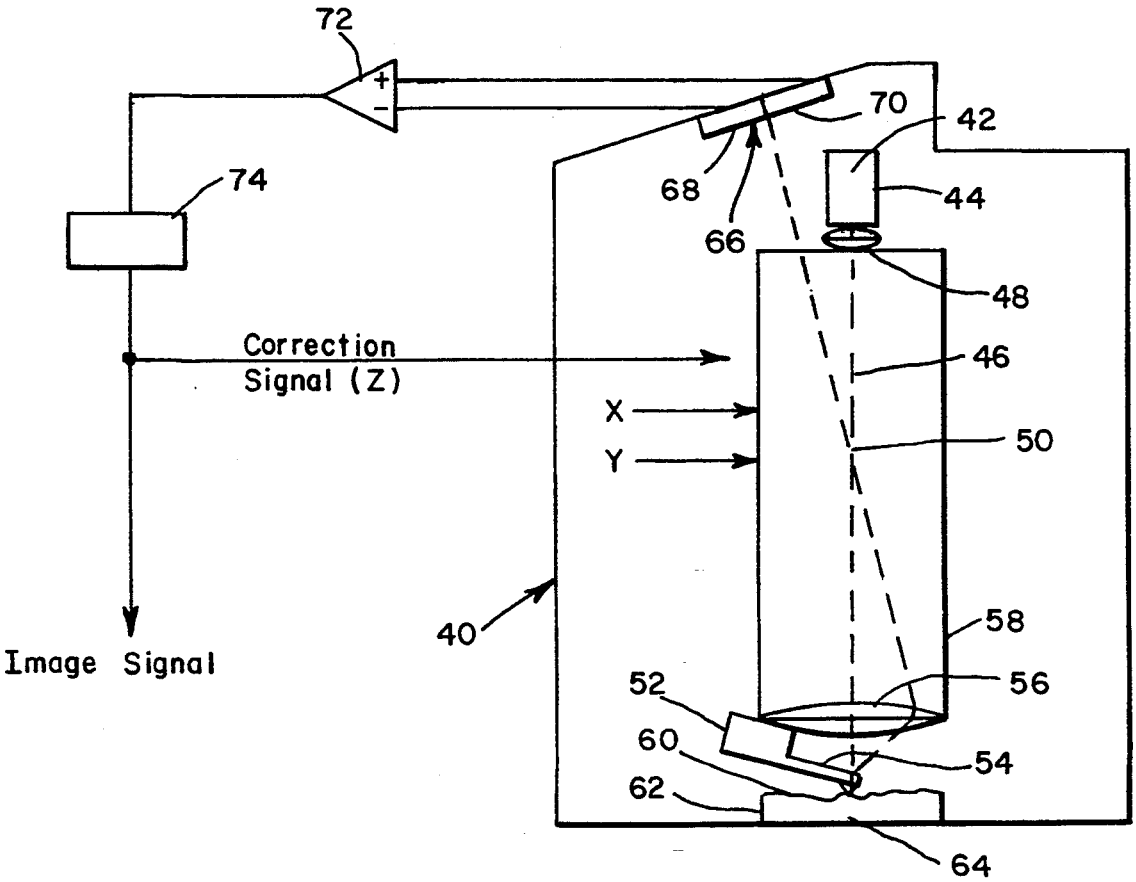
26 Claims, 2 Drawing Sheets