FIG. 1

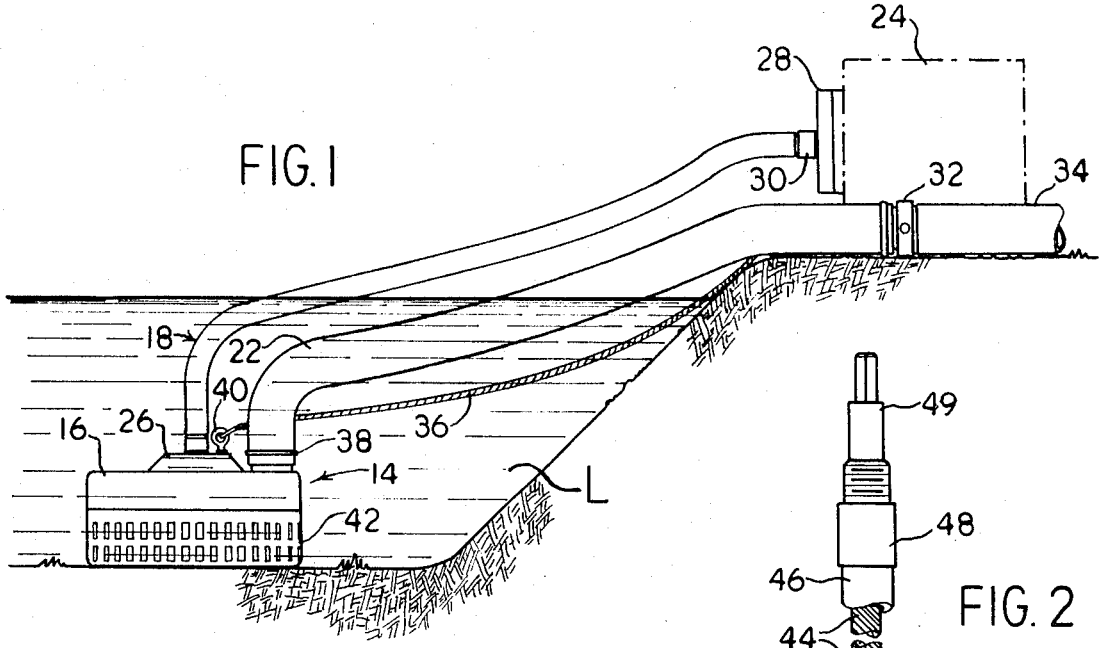

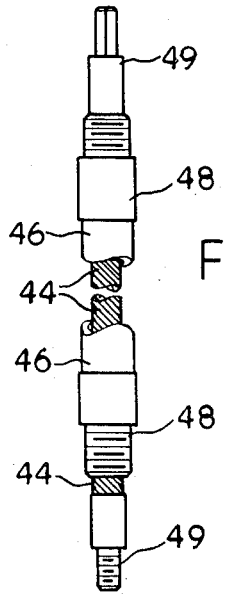

FIG. 2

FIG. 3

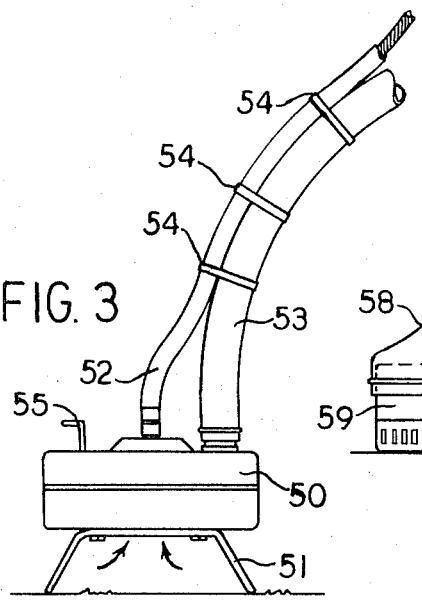

FIG. 4

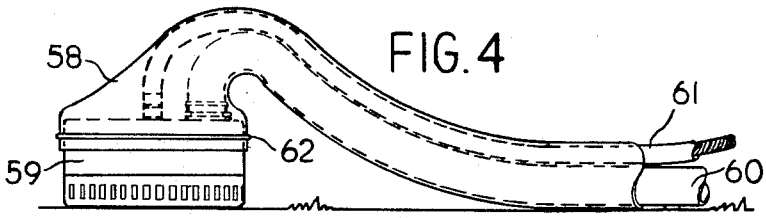

INVENTOR.
CARLOS A. CRESPO

by Alfred E. Mullen
ATTORNEY