US005872552A

United States Patent [19]

Gordon, II et al.

[11] **Patent Number: 5,872,552**

[45] **Date of Patent: *Feb. 16, 1999**

[54] **ELECTROPHORETIC DISPLAY**

[75] Inventors: **Joseph Grover Gordon, II**; **Mark Whitney Hart**, both of San Jose; **Andrew Marian Homola**, Morgan Hill; **Dennis Richard McKean**, Cupertino; **Lawrence Brian Schein**, San Jose; **Barton Allen Smith**, Campbell; **Sally Ann Swanson**, San Jose, all of Calif.

[73] Assignee: **International Business Machines Corporation**, Armonk, N.Y.

[*] Notice: The term of this patent shall not extend beyond the expiration date of Pat. No. 5,745,094.

[21] Appl. No.: **864,806**

[22] Filed: **May 29, 1997**

Related U.S. Application Data

[63] Continuation of Ser. No. 365,270, Dec. 28, 1994, Pat. No. 5,745,094.

[51] **Int. Cl.**[6] **G09G 3/34**

[52] **U.S. Cl.** **345/107**; 359/296

[58] **Field of Search** 345/48, 107; 359/296

[56] **References Cited**

U.S. PATENT DOCUMENTS

3,612,758	10/1971	Evans et al.	178/5.4 R
4,218,302	8/1980	Dalisa et al.	204/299 R
4,272,596	6/1981	Harbour et al.	430/37
4,620,916	11/1986	Zwemer et al.	204/299 R
4,648,956	3/1987	Marshall et al.	204/299 EC
4,650,288	3/1987	White	350/362
4,833,464	5/1989	Di Santo	345/148
5,276,438	1/1994	DiSanto	345/107
5,293,528	3/1994	DiSanto	345/107
5,298,833	3/1994	Hou	313/483

FOREIGN PATENT DOCUMENTS

51-130241	11/1976	Japan	G02F 1/17
55-071782	5/1980	Japan	C09K 9/02
55-105227	8/1980	Japan	G02F 1/19
59-165028	9/1984	Japan	G02F 1/19
60-087317	5/1985	Japan	G02F 1/19
60-189731	9/1985	Japan	G02F 1/19
02-189525	7/1990	Japan	G02F 1/167
02-223932	9/1990	Japan	G02F 1/167
02-223933	9/1990	Japan	G02F 1/167
02-284123	11/1990	Japan	G02F 1/167
02-284128	11/1990	Japan	G02F 1/167

(List continued on next page.)

OTHER PUBLICATIONS

Beilin et al., "2000–Character Electrophoretic Display", SID 86 Digest, pp. 136–140.

Chiang, "Conduction Mechanism of Charge Control Agents Used in Electrophoretic Display Devices", Proceeding of the S.I.D., vol. 18, 3rd/4th Quarters 1977, pp. 275–282.

Chiang, "Electrophoretic Displays: The State of the Art", IEEE, 1980, pp. 10–12.

Croucher et al., "Electrophoretic Display: Materials as Related to Performance", Photographic Science and Engineering, vol. 25, No. 2, Mar./Apr. 1981, pp. 80–86.

Croucher et al., "Some Physicochemical Properties of Electrophoretic Display Materials", Ind. Eng. Chem. Prod. Res. Dev., vol. 20, No. 2, 1981, pp. 324–329.

Dalisa, "Electrophoretic Display Technology", Proceeding of the S.I.D., vol. 18, 1st Quarter 1977, pp. 43–50.

Dalisa, "Electrophoretic Display Technology", IEEE Transactions on Electron Devices, vol. ED–24, No. 7, Jul. 1977, pp. 827–834.

(List continued on next page.)

Primary Examiner—Jeffrey Brier
Attorney, Agent, or Firm—Robert B. Martin

[57] **ABSTRACT**

The invention relates to an ambient light electrophoretic display comprising a plurality of cells containing a suspension of charged pigment particles in a light-transmissive fluid. Each cell comprises a light-transmissive front window, a nonobstructing collecting electrode and counter electrode disposed in the cell, and a panel having a reflective or absorbing surface.
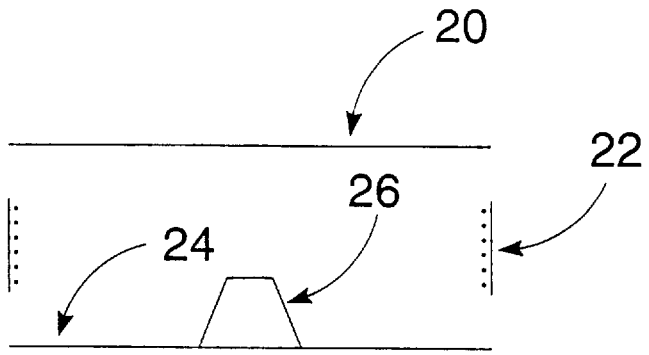
2 Claims, 2 Drawing Sheets