US005752152A

United States Patent [19]

Gasper et al.

[11] Patent Number: 5,752,152

[45] Date of Patent: May 12, 1998

[54] **COPY RESTRICTIVE SYSTEM**

[75] Inventors: **John Gasper**, Hilton; **Jay Stuart Schildkraut**, Rochester, both of N.Y.

[73] Assignee: **Eastman Kodak Company**, Rochester, N.Y.

[21] Appl. No.: **598,778**

[22] Filed: **Feb. 8, 1996**

[51] **Int. Cl.**[6] **G03G 21/00**

[52] **U.S. Cl.** **399/366**; 283/902

[58] **Field of Search** 399/366; 283/902; 355/133; 380/51

[56] **References Cited**

U.S. PATENT DOCUMENTS

3,852,088	12/1974	Godlewski et al.	355/133 X
4,351,547	9/1982	Brooks	283/902 X
4,988,126	1/1991	Heckenkamp et al.	283/902 X
5,018,767	5/1991	Wicker	283/67
5,193,853	3/1993	Wicker	283/85
5,216,724	6/1993	Suzuki et al.	399/130
5,231,663	7/1993	Earl et al.	380/18
5,257,119	10/1993	Funada et al.	358/438
5,286,286	2/1994	Winnik et al.	106/21
5,291,243	3/1994	Heckman et al.	355/201
5,338,067	8/1994	Gundjian	283/902 X
5,375,886	12/1994	Tsuchiya	283/93
5,379,093	1/1995	Hashimoto et al.	355/201
5,385,803	1/1995	Duff et al.	430/138
5,390,003	2/1995	Yamaguchi et al.	355/201
5,396,559	3/1995	McGrew	380/54
5,412,718	5/1995	Narasimhalu et al.	380/4
5,418,602	5/1995	Nishikawa	355/201
5,444,779	8/1995	Daniele	380/3
5,621,503	4/1997	Komaki et al.	399/366

FOREIGN PATENT DOCUMENTS

688127A	12/1995	European Pat. Off. .
4426126	1/1995	Germany .
01 065548	6/1989	Japan .
2277223	10/1994	United Kingdom .

OTHER PUBLICATIONS

Nature, p. 119, vol. 156, 1945.

Research Disclosure No. 365, Sep. 1994.

Primary Examiner—Fred L. Braun

Attorney, Agent, or Firm—Edward Dugas

[57] **ABSTRACT**

A system and associated method for restricting the copying of an image document that contains an image of arbitrary and undetermined character that is formed in or on a document medium having a predetermined pattern of microdots. One embodiment of the system includes a copy machine and associated software that scans for the presence of microdots in an image document and if present prevents the copy machine from making a copy. The microdots are of such a size that they are not visible to the unaided eye, but when machine scanned their presence is sensed.

35 Claims, 5 Drawing Sheets
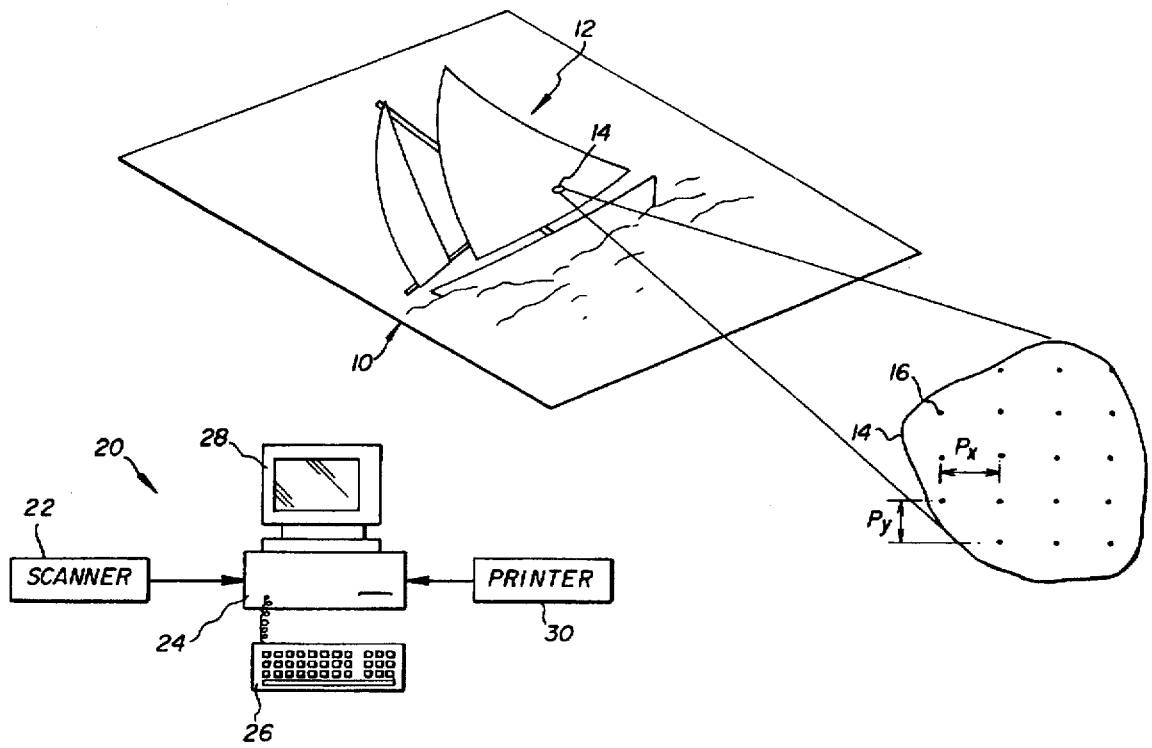
Microfiche Appendix Included
(1 Microfiche, 14 Pages)