United States Patent [19]

Ganias

[11] **4,041,552**

[45] **Aug. 16, 1977**

[54] **ARTIFICIAL LENS**

[76] Inventor: **Fotios Ganias,** 4 N. Ashland St., Worcester, Mass. 01609

[21] Appl. No.: **719,672**

[22] Filed: **Sept. 1, 1976**

[51] **Int. Cl.**[2] **A61F 1/16; A61F 1/24**

[52] **U.S. Cl.** **3/13**

[58] **Field of Search** 3/13, 1

[56] **References Cited**

U.S. PATENT DOCUMENTS

3,711,870	1/1973	Deitrick	3/13
3,906,551	9/1975	Otter	3/13
3,971,073	7/1976	Richards et al.	3/13

Primary Examiner—Ronald L. Frinks

Attorney, Agent, or Firm—Norman S. Blodgett; Gerry A. Blodgett

[57] **ABSTRACT**

Artificial lens for replacement of natural lens in the eye, wherein an elongated arm is provided for attaching the lens to the ciliary body and sclera and for locating the lens adjacent the iris without interfering with the operation thereof.
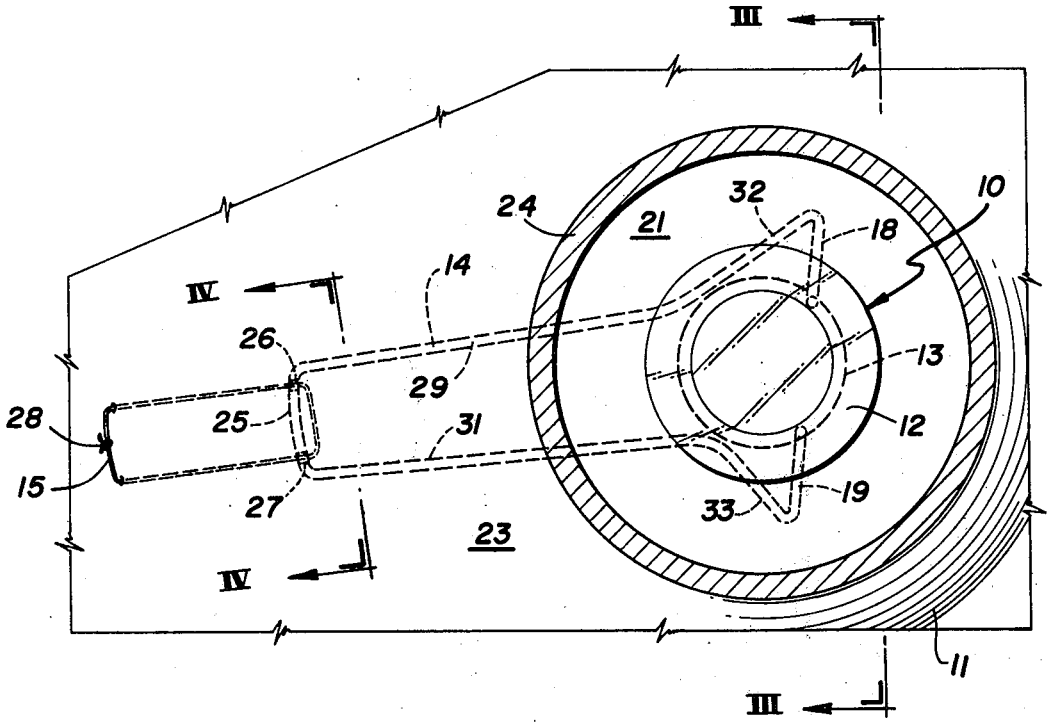
9 Claims, 5 Drawing Figures