US009636852B2

(12) **United States Patent**
Okamoto et al.

(10) **Patent No.: US 9,636,852 B2**
(45) **Date of Patent: May 2, 2017**

(54) **INJECTION MOLDING METHOD**

(75) Inventors: **Akio Okamoto**, Yamaguchi (JP); **Kazuaki Miyamoto**, Yamaguchi (JP); **Toshikazu Iwamoto**, Yamaguchi (JP); **Yuichiro Fukuda**, Yamaguchi (JP)

(73) Assignee: **UBE MACHINERY CORPORATION, LTD.**, Yamaguchi (JP)

(*) Notice: Subject to any disclaimer, the term of this patent is extended or adjusted under 35 U.S.C. 154(b) by 529 days.

(21) Appl. No.: **14/118,218**

(22) PCT Filed: **Apr. 27, 2012**

(86) PCT No.: **PCT/JP2012/061442**

§ 371 (c)(1),
(2), (4) Date: **Dec. 3, 2013**

(87) PCT Pub. No.: **WO2012/160952**

PCT Pub. Date: **Nov. 29, 2012**

(65) **Prior Publication Data**

US 2014/0077406 A1 Mar. 20, 2014

(30) **Foreign Application Priority Data**

May 20, 2011 (JP) 2011-112938
May 20, 2011 (JP) 2011-112939

(51) **Int. Cl.**
B29C 44/02 (2006.01)
B29C 44/08 (2006.01)
(Continued)

(52) **U.S. Cl.**
CPC ***B29C 44/086*** (2013.01); ***B29C 44/04*** (2013.01); ***B29C 44/0461*** (2013.01);
(Continued)

(58) **Field of Classification Search**
CPC B29C 44/086
See application file for complete search history.

(56) **References Cited**

U.S. PATENT DOCUMENTS

3,966,372 A * 6/1976 Yasuike B29C 45/1645 264/45.1
4,124,308 A * 11/1978 Sokolow B29C 44/0492 264/328.12

(Continued)

FOREIGN PATENT DOCUMENTS

JP 50-090658 A 7/1975
JP 54-034378 A 3/1979

(Continued)

OTHER PUBLICATIONS

International Search Report for PCT/JP2012/061442 dated Jul. 17, 2012.

Primary Examiner — Ryan Ochylski
(74) *Attorney, Agent, or Firm* — Nixon Peabody LLP; Joseph Bach, Esq.

(57) **ABSTRACT**

An injection molding method comprising: a mold clamping step of clamping a first mold and a second mold to form a mold cavity; a first injection filling step of injecting a foamable molten resin into the mold cavity to fill an interior of the mold cavity with the foamable molten resin, after completion of the mold clamping step; a mold cavity expansion step of expanding the mold cavity by a specified quantity to cause the foamable molten resin to foam, after the start of the first injection filling step; and a second injection filling step of pouring a molten resin or gas into the foamable molten resin within the mold cavity, after the completion of the first injection filling step, and after the start of the mold cavity expansion step.
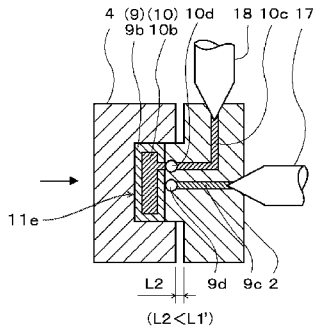
3 Claims, 13 Drawing Sheets