United States Patent [19]

Carter

[11] **Patent Number: 5,033,252**

[45] **Date of Patent: * Jul. 23, 1991**

[54] **METHOD OF PACKAGING AND STERILIZING A PHARMACEUTICAL PRODUCT**

[75] Inventor: **Douglas V. Carter**, Lenoir, N.C.

[73] Assignee: **Entravision, Inc.**, Lenoir, N.C.

[*] Notice: The portion of the term of this patent subsequent to Aug. 14, 2007 has been disclaimed.

[21] Appl. No.: **559,340**

[22] Filed: **Jul. 30, 1990**

Related U.S. Application Data

[63] Continuation of Ser. No. 273,605, Nov. 21, 1988, Pat. No. 4,947,620, which is a continuation of Ser. No. 137,436, Dec. 23, 1987, Pat. No. 4,805,377.

[51] **Int. Cl.**[5] **B65B 55/02**

[52] **U.S. Cl.** **53/425**

[58] **Field of Search** 53/415, 425, 449, 453, 53/471, 167, 421

[56] **References Cited**

U.S. PATENT DOCUMENTS

2,004,079	6/1935	McManus	53/421
4,467,588	8/1984	Carveth	53/425
4,805,377	2/1989	Carter	53/449 X
4,947,620	8/1990	Carter	53/449 X

Primary Examiner—John Sipos

Attorney, Agent, or Firm—Rhodes, Coats & Bennett

[57] **ABSTRACT**

A method of filling, sealing and sterilizing a pharmaceutical package including a polypropylene bottle containing a balanced salt solution includes the steps of filling each bottle to maximum capacity to exclude residual air, the introduction of a silicone rubber gasket into the bottle cap to absorb pressure and prevent leakage during a steam sterilization procedure, and the enclosure of the filled bottles in a blister pack before steam sterilizing. The blister packs have Tyvek TM lids and are placed blister-side-up during the sterilization process to eliminate deformation of the blister during sterilization. Maximum filling of the bottle with liquid and the substantial elimination of air prevents dimpling of the bottle.
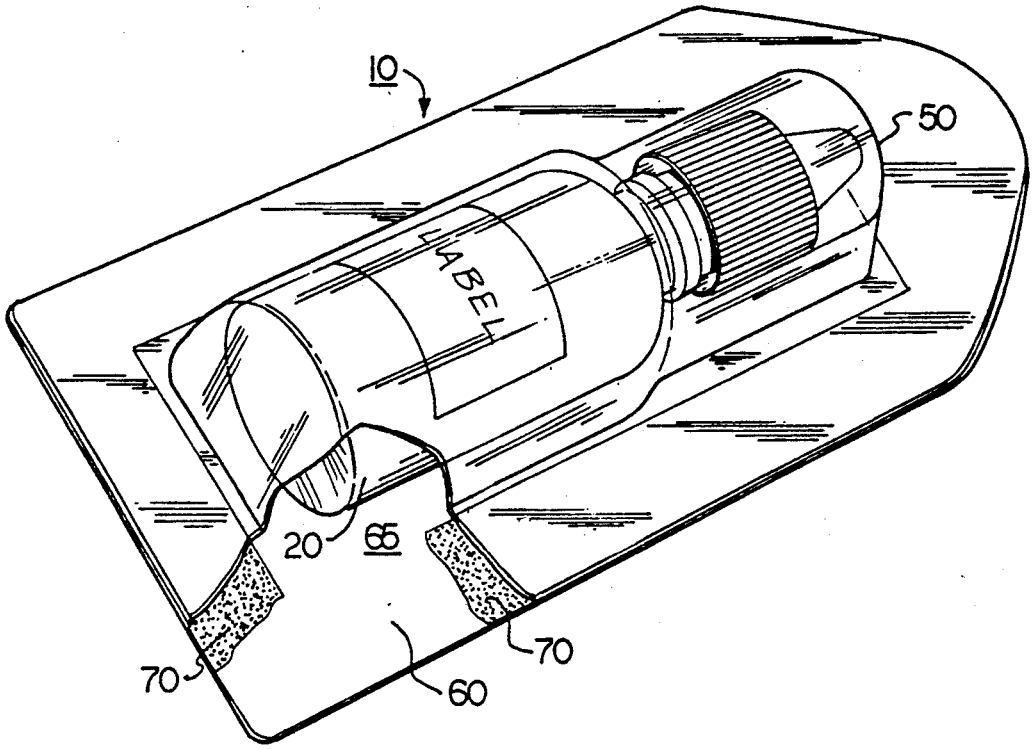
11 Claims, 1 Drawing Sheet