US009625952B2

(12) **United States Patent**
Holung et al.

(10) **Patent No.: US 9,625,952 B2**
(45) **Date of Patent: Apr. 18, 2017**

(54) **HINGE ASSEMBLIES**

(71) Applicant: **Lenovo (Singapore) Pte. Ltd.**, Singapore (SG)

(72) Inventors: **Joseph Anthony Holung**, Wake Forest, NC (US); **Bouziane Yebka**, Apex, NC (US); **Tin-Lup Wong**, Chapel Hill, NC (US); **Seita Horikoshi**, Zama (JP); **Yoshiharu Uchiyama**, Isehara (JP)

(73) Assignee: **Lenovo (Singapore) Pte. Ltd.**, Singapore (SG)

(*) Notice: Subject to any disclaimer, the term of this patent is extended or adjusted under 35 U.S.C. 154(b) by 205 days.

(21) Appl. No.: **14/482,670**

(22) Filed: **Sep. 10, 2014**

(65) **Prior Publication Data**

US 2016/0070310 A1 Mar. 10, 2016

(51) **Int. Cl.**
G06F 1/16 (2006.01)
E05D 3/12 (2006.01)

(52) **U.S. Cl.**
CPC ***G06F 1/1681*** (2013.01); ***E05D 3/122*** (2013.01); ***G06F 1/1618*** (2013.01); *E05Y 2900/606* (2013.01)

(58) **Field of Classification Search**
CPC G06F 1/162
See application file for complete search history.

(56) **References Cited**

U.S. PATENT DOCUMENTS

5,987,704 A * 11/1999 Tang G06F 1/1681 16/342
6,519,812 B2 * 2/2003 Ko H04N 5/2251 16/248
7,345,872 B2 * 3/2008 Wang G06F 1/1618 16/354
8,782,853 B2 * 7/2014 Ge G06F 1/1681 16/354
8,938,855 B2 * 1/2015 Ahn F16C 11/04 16/354
9,274,552 B2 * 3/2016 Ahn G06F 1/1641
2005/0122671 A1 * 6/2005 Homer G06F 1/1618 361/679.27
2008/0242359 A1 * 10/2008 Seol G06F 1/1616 455/566
2009/0070961 A1 * 3/2009 Chung E05D 3/122 16/354
2010/0277860 A1 * 11/2010 Jeong H04M 1/0216 361/679.27
2012/0147535 A1 * 6/2012 Ahn G06F 1/1641 361/679.01
2013/0322004 A1 * 12/2013 Park F16C 11/10 361/679.27
2015/0023030 A1 * 1/2015 Tsukamoto G06F 1/1652 362/419
2015/0146362 A1 * 5/2015 Meyers E05D 3/122 361/679.27

* cited by examiner

Primary Examiner — Anthony Q Edwards
(74) *Attorney, Agent, or Firm* — Brian J. Pangrle

(57) **ABSTRACT**

An apparatus can include a processor; memory accessible by the processor; a first housing that includes a front side and a back side and a thickness therebetween; a second housing that includes a front side and a back side and a thickness therebetween; a first gear operatively coupled to the first housing; and a second gear operatively coupled to the second housing where the first and second gears mesh to orient the first and second housings in a front side to front side orientation and in a back side to back side orientation.
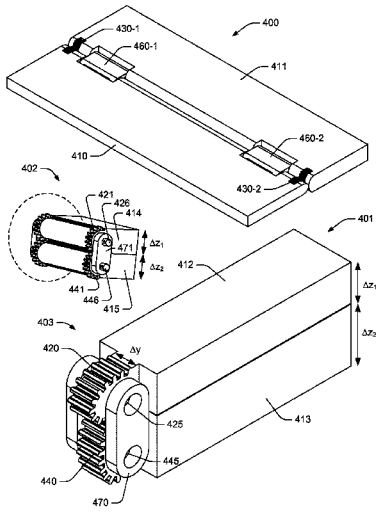
20 Claims, 19 Drawing Sheets