US009925052B2

(12) **United States Patent**
Dai et al.

(10) **Patent No.: US 9,925,052 B2**
(45) **Date of Patent: Mar. 27, 2018**

(54) **METHOD FOR OPTIMIZING IMPLANT DESIGNS**

(71) Applicant: **Zimmer, Inc.**, Warsaw, IN (US)

(72) Inventors: **Yifei Dai**, Warsaw, IN (US); **Christine Schaerer**, Winterthur (CH); **Dwight T Todd**, Columbia City, IN (US); **Jeffrey E. Bischoff**, Warsaw, IN (US); **Adam D. Henderson**, Winterthur (CH)

(73) Assignee: **Zimmer, Inc.**, Warsaw, IN (US)

(*) Notice: Subject to any disclaimer, the term of this patent is extended or adjusted under 35 U.S.C. 154(b) by 822 days.

(21) Appl. No.: **14/471,440**

(22) Filed: **Aug. 28, 2014**

(65) **Prior Publication Data**

US 2015/0066150 A1 Mar. 5, 2015

Related U.S. Application Data

(60) Provisional application No. 61/872,296, filed on Aug. 30, 2013.

(51) **Int. Cl.**

A61F 2/38	(2006.01)
A61F 2/46	(2006.01)
A61F 2/30	(2006.01)

(52) **U.S. Cl.**

CPC ***A61F 2/389*** (2013.01); ***A61F 2/30942*** (2013.01); ***A61F 2/38*** (2013.01); ***A61F 2/3859*** (2013.01); ***A61F 2/3868*** (2013.01); ***A61F 2/4684*** (2013.01); *A61F 2/3094* (2013.01); *A61F 2002/30878* (2013.01); *A61F 2002/30884* (2013.01)

(58) **Field of Classification Search**

CPC .. A61F 2002/30878; A61F 2002/30884; A61F 2/3094; A61F 2/30942; A61F 2/38; A61F 2/3859; A61F 2/3868; A61F 2/389; A61F 2/4684

See application file for complete search history.

(56) **References Cited**

U.S. PATENT DOCUMENTS

2013/0131820 A1 5/2013 Wentorf et al.

Primary Examiner — Larry E Waggle, Jr.
(74) *Attorney, Agent, or Firm* — Schwegman Lundberg & Woessner, P.A.

(57) **ABSTRACT**

Methods are disclosed for designing a tibial implant to minimize cortical impingement of a keel or other fixation structure when the tibial implant is implanted in the tibia bone. The design of the keel or other fixation structure on the tibial baseplate can be based on determining a common area between defined cancellous regions of at least two tibia bones. Methods are disclosed for designing a femoral component having a stem extension such that the stem can be sufficiently placed in the diaphysis of the femur when the femoral component is implanted. The method includes determining a canal axis in a femur that creates adequate engagement between a reamer and the diaphysis of the femur.
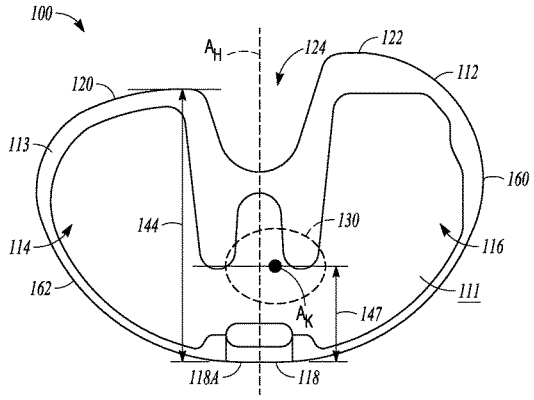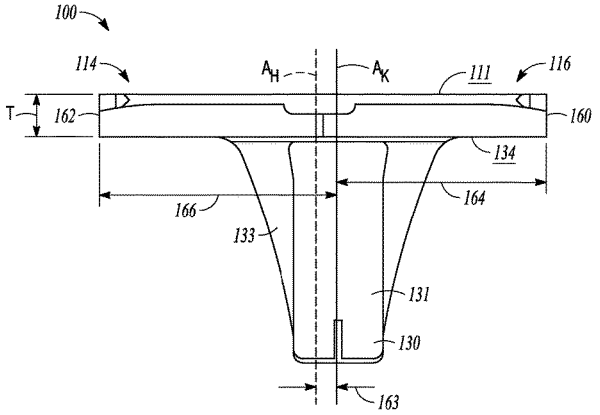
20 Claims, 10 Drawing Sheets