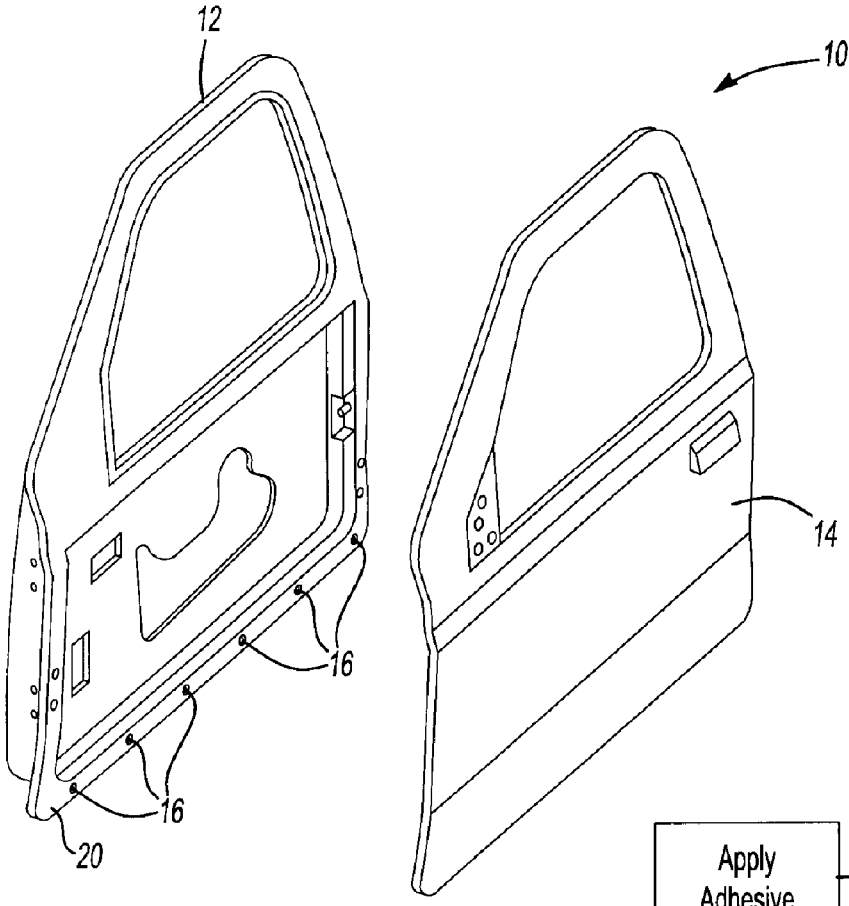
12
10
14
16
16
20

Fig-1

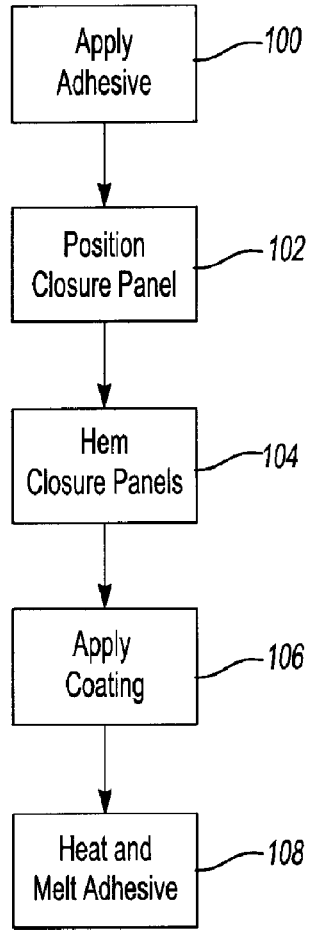
Apply Adhesive
100
Position Closure Panel
102
Hem Closure Panels
104
Apply Coating
106
Heat and Melt Adhesive
108

Fig-2