US009411252B2

(12) **United States Patent**
**Murakami et al.**

(10) **Patent No.: US 9,411,252 B2**
(45) **Date of Patent: Aug. 9, 2016**

(54) **ELECTROPHOTOGRAPHIC PHOTOSENSITIVE MEMBER, METHOD OF PRODUCING THE SAME, PROCESS CARTRIDGE, AND ELECTROPHOTOGRAPHIC APPARATUS**

(71) Applicant: **CANON KABUSHIKI KAISHA**, Tokyo (JP)

(72) Inventors: **Mai Murakami**, Kashiwa (JP); **Kenichi Kaku**, Newcastle Upon Tyne (GB); **Wataru Kitamura**, Abiko (JP); **Yuka Ishiduka**, Suntou-gun (JP); **Ryoichi Tokimitsu**, Kashiwa (JP); **Hideaki Nagasaka**, Suntou-gun (JP); **Takeshi Murakami**, Numazu (JP)

(73) Assignee: **Canon Kabushiki Kaisha**, Tokyo (JP)

( * ) Notice: Subject to any disclaimer, the term of this patent is extended or adjusted under 35 U.S.C. 154(b) by 0 days.

(21) Appl. No.: **14/361,965**

(22) PCT Filed: **Nov. 28, 2012**

(86) PCT No.: **PCT/JP2012/081431**

§ 371 (c)(1),
(2) Date: **May 30, 2014**

(87) PCT Pub. No.: **WO2013/081171**

PCT Pub. Date: **Jun. 6, 2013**

(65) **Prior Publication Data**

US 2014/0342276 A1 Nov. 20, 2014

(30) **Foreign Application Priority Data**

Nov. 30, 2011 (JP) ..... 2011-262128
Nov. 21, 2012 (JP) ..... 2012-254808

(51) **Int. Cl.**
***G03G 5/14*** (2006.01)
***G03G 5/10*** (2006.01)

(52) **U.S. Cl.**
CPC ..... ***G03G 5/142*** (2013.01); ***G03G 5/102*** (2013.01); ***G03G 5/144*** (2013.01)

(58) **Field of Classification Search**
CPC ..... G03G 5/14; G03G 5/142; G03G 5/144
See application file for complete search history.

(56) **References Cited**

FOREIGN PATENT DOCUMENTS

| | | | | |
|---|---|---|---|---|
| JP | 3-013960 A | | 1/1991 | |
| JP | 3-209261 A | | 9/1991 | |
| JP | H03-209262 A | | 9/1991 | |
| JP | 9-96916 A | | 4/1997 | |
| JP | 2004-191868 A | | 7/2004 | |
| JP | 2011-059518 | * | 3/2011 | ..... G03G 5/047 |
| JP | 2011-059518 A | | 3/2011 | |

OTHER PUBLICATIONS

Translation of JP 2011-059518 publsihed Mar. 2011.*
"The Journal of the Japanese Society for Dental Materials and Devices," vol. 11, No. 6, pp. 916-921(1992), Shigeaki Kurata and Noboru Yamazaki.

* cited by examiner

*Primary Examiner* — Peter Vajda
(74) *Attorney, Agent, or Firm* — Canon U.S.A., Inc., IP Division

(57) **ABSTRACT**

An electrophotographic photosensitive member includes an undercoat layer containing a silane coupling agent having a divalent group represented by —NH— and an urethane resin. The modulus of elastic deformation (we/wt) of a surface of the undercoat layer satisfies formula (X), where the modulus of elastic deformation is measured by a universal hardness test.
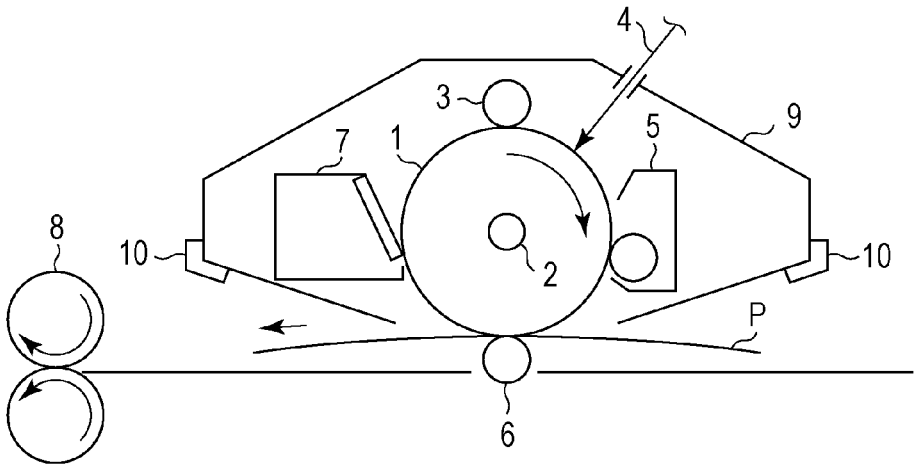
**11 Claims, 2 Drawing Sheets**