US009410652B2

(12) **United States Patent**
Ellis et al.

(10) **Patent No.: US 9,410,652 B2**
(45) **Date of Patent: Aug. 9, 2016**

(54) **HEATED FLUID CONDUITS, SYSTEMS AND METHODS**

(75) Inventors: **Michael H. Ellis**, Denver, CO (US); **Timothy Deans**, Parker, CO (US); **Evan Twarog**, Shippensburg, PA (US); **Donald R. Gilbreath**, Castle Rock, CO (US); **Walker Bolger**, Denver, CO (US); **Tim Saupe**, Parker, CO (US)

(73) Assignee: **GATES CORPORATION**, Denver, CO (US)

(*) Notice: Subject to any disclaimer, the term of this patent is extended or adjusted under 35 U.S.C. 154(b) by 2116 days.

(21) Appl. No.: **12/378,435**

(22) Filed: **Feb. 13, 2009**

(65) **Prior Publication Data**

US 2010/0209085 A1 Aug. 19, 2010

(51) **Int. Cl.**

E03B 7/10	(2006.01)
F24H 1/10	(2006.01)
F16L 53/00	(2006.01)

(52) **U.S. Cl.**

CPC ***F16L 53/007*** (2013.01)

(58) **Field of Classification Search**

None

See application file for complete search history.

(56) **References Cited**

U.S. PATENT DOCUMENTS

2,683,673	A *	7/1954	Silversher	428/328
3,727,029	A *	4/1973	Chrow	392/468
4,323,174	A *	4/1982	Wood	222/146.2
4,455,474	A *	6/1984	Jameson et al.	392/472
4,553,023	A *	11/1985	Jameson et al.	392/472
4,581,521	A	4/1986	Grise	219/535
4,874,925	A *	10/1989	Dickenson	392/472
5,381,511	A *	1/1995	Bahar et al.	392/472
5,394,507	A *	2/1995	Okamoto	392/480
5,832,178	A *	11/1998	Schave	392/472
5,933,574	A *	8/1999	Avansino	392/468
6,738,566	B2 *	5/2004	Pagnella	392/472
7,266,293	B1 *	9/2007	Dundas	392/478
7,541,542	B2	6/2009	Park et al.	
7,732,735	B2 *	6/2010	Bourget et al.	219/221
7,991,273	B2 *	8/2011	Sonderegger et al.	392/478
2007/0045275	A1	3/2007	Steinhauser et al.	219/228

FOREIGN PATENT DOCUMENTS

WO	WO 00/19773	6/2000	H05B 3/34

OTHER PUBLICATIONS

Notification of Transmittal of the International Search Report and the Written Opinion of the International Searching Authority, PCT/US/2010/000405 Dated Jun. 4, 2010.

* cited by examiner

Primary Examiner — Thor Campbell

(74) *Attorney, Agent, or Firm* — Jeffrey A. Thurnau, Esq.; Paul N. Dunlap, Esq.

(57) **ABSTRACT**

A heated fluid conduit has a body with a semi-conductive material disposed therein with an electrical power supply coupled to the conduit to provide a voltage across the conduit and a current therethrough, heating the fluid conduit. A fluid conduit heating system comprises a semiconductive sleeve disposed over a fluid conduit and an electrical power supply coupled to the ends of the sleeve to provide a voltage across the sleeve and a resulting current through the semiconductive sleeve, heating the sleeve and conduit Alternatively, one terminal of the electrical power supply is coupled to each end of the sleeve or conduit, and another terminal of the electrical power supply is coupled to the sleeve or conduit therebetween, to provide parallel heating circuits.
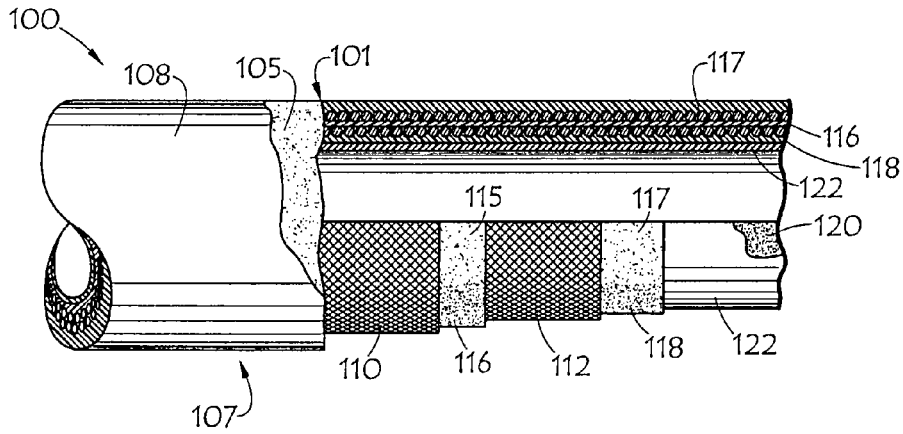
13 Claims, 4 Drawing Sheets