US009409652B2

(12) **United States Patent**
Espinosa Sanchez

(10) **Patent No.: US 9,409,652 B2**
(45) **Date of Patent: Aug. 9, 2016**

(54) **DUAL PRESSURE REGULATION SYSTEM FOR AERIAL REFUELING OPERATIONS**

(71) Applicant: **EADS Construcciones Aeronáuticas S.A.**, Getafe (ES)

(72) Inventor: **Martin Espinosa Sanchez**, Getafe (ES)

(73) Assignee: **EADS Construcciones Aeronauticas S.A.**, Madrid (ES)

(*) Notice: Subject to any disclaimer, the term of this patent is extended or adjusted under 35 U.S.C. 154(b) by 124 days.

(21) Appl. No.: **14/292,003**

(22) Filed: **May 30, 2014**

(65) **Prior Publication Data**

US 2015/0203210 A1 Jul. 23, 2015

(30) **Foreign Application Priority Data**

May 31, 2013 (EP) 13382207

(51) **Int. Cl.**
B64D 39/06 (2006.01)
G05D 16/10 (2006.01)

(52) **U.S. Cl.**
CPC ***B64D 39/06*** (2013.01); ***G05D 16/103*** (2013.01); *Y10T 137/7793* (2015.04)

(58) **Field of Classification Search**
CPC B64D 39/06; F16K 31/12; F16K 11/065; F16K 11/10; F16K 15/186; F16K 17/02; F16K 31/1245; F16K 31/1225; F16K 31/124; G05D 16/103; G05D 16/106; G05D 16/10
USPC 137/487, 488, 493, 614.19, 493.9, 613, 137/505.13
See application file for complete search history.

(56) **References Cited**

U.S. PATENT DOCUMENTS

1,838,723 A * 12/1931 Welcker F16K 1/12 137/220
3,192,940 A * 7/1965 Wiersholm B64D 39/06 137/220
3,399,690 A * 9/1968 Theodore F16K 1/126 137/220
3,586,033 A * 6/1971 Hieber B64D 39/06 137/220
3,742,972 A * 7/1973 Hughes F16K 11/207 137/110
3,792,713 A * 2/1974 Zadoo F16K 1/126 137/220
3,851,852 A * 12/1974 Blanchard B64D 39/06 137/614.04
4,437,485 A * 3/1984 Goodman F16K 15/063 137/220

(Continued)

FOREIGN PATENT DOCUMENTS

WO WO 2008/145970 12/2008
WO WO 2010/084316 7/2010

OTHER PUBLICATIONS

European Search Report for EP 13 38 2207.2, dated Nov. 18, 2013, Wojski, Guadalupe.

Primary Examiner — Craig Schneider
Assistant Examiner — Daniel P Donegan
(74) *Attorney, Agent, or Firm* — Nixon & Vanderhye P.C.

(57) **ABSTRACT**

The present invention refers to a dual pressure regulation system to ensure a proper pressure regulation during the Aerial REFUELING operations with Hose and Drogue systems. More specifically is directed to dual redundant fuel pressure regulation systems. The pressure regulator system comprises two pressure regulators (**10**, **20**) located in series and a control element (**30**) for controlling the movement of both regulators operatively connected downstream (**34**) the second pressure regulator (**20**) such that the movement of the pressure regulators (**10**, **20**) is independently controlled by the control element (**30**) according to the delivery pressure downstream the second regulator (**20**).
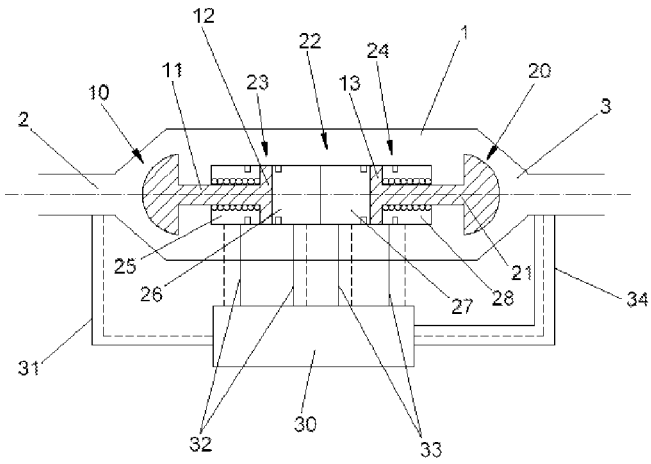
14 Claims, 2 Drawing Sheets