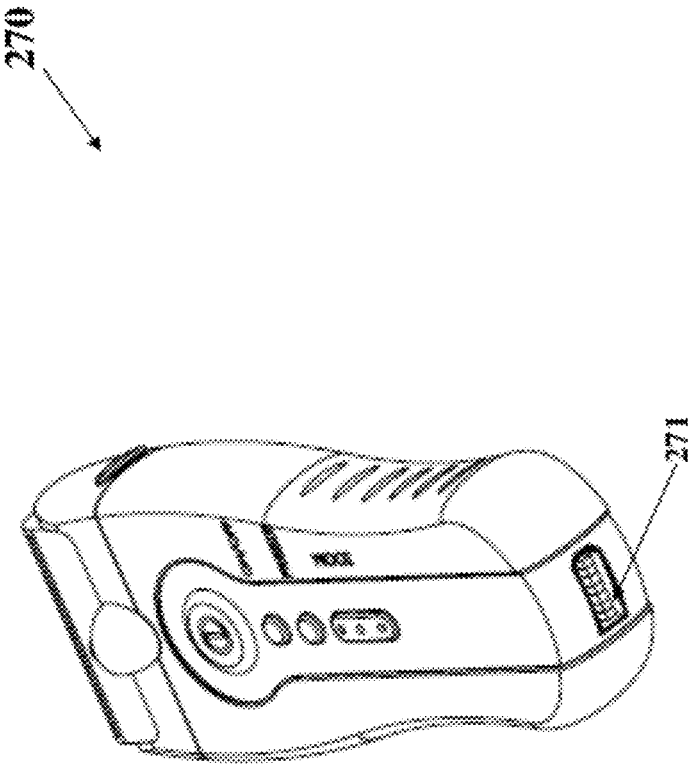

Figure 27