No. 774,251. PATENTED NOV. 8, 1904.

H. HUBBELL.

SEPARABLE ATTACHMENT PLUG.

APPLICATION FILED MAY 27, 1904.

NO MODEL. 2 SHEETS—SHEET 1.

Fig. 1.

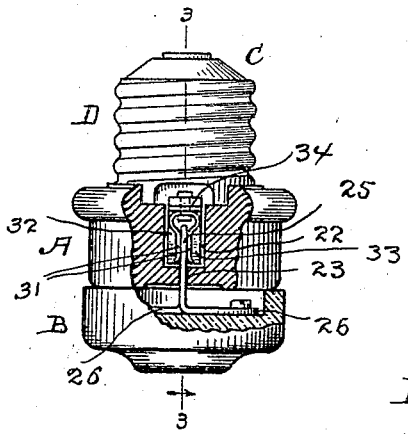

Fig. 3.

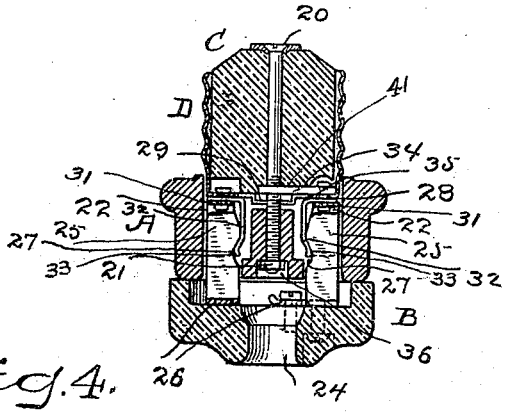

Fig. 4.

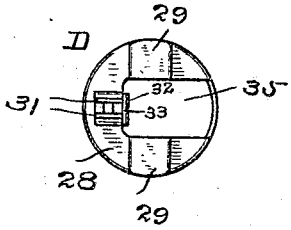

Fig. 2.

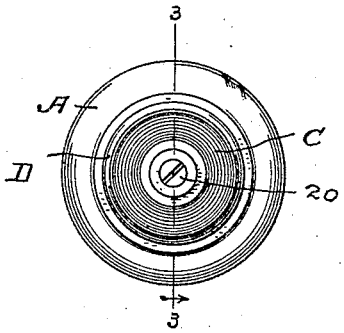

Fig. 5.

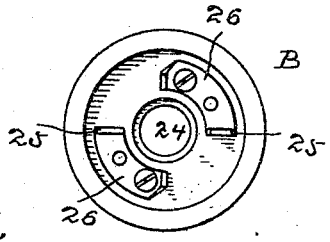

Fig. 6.

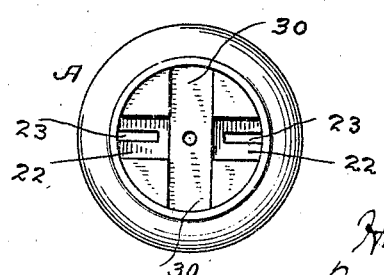

WITNESSES.

H. A. Lamb

S. W. Atherton.

INVENTOR.

Harvey Hubbell

By A. M. Booster

Atty.

PHOTO LITHOGRAPHED BY SACKETT & WILHELMS LITHO. & PTG. CO. NEW YORK