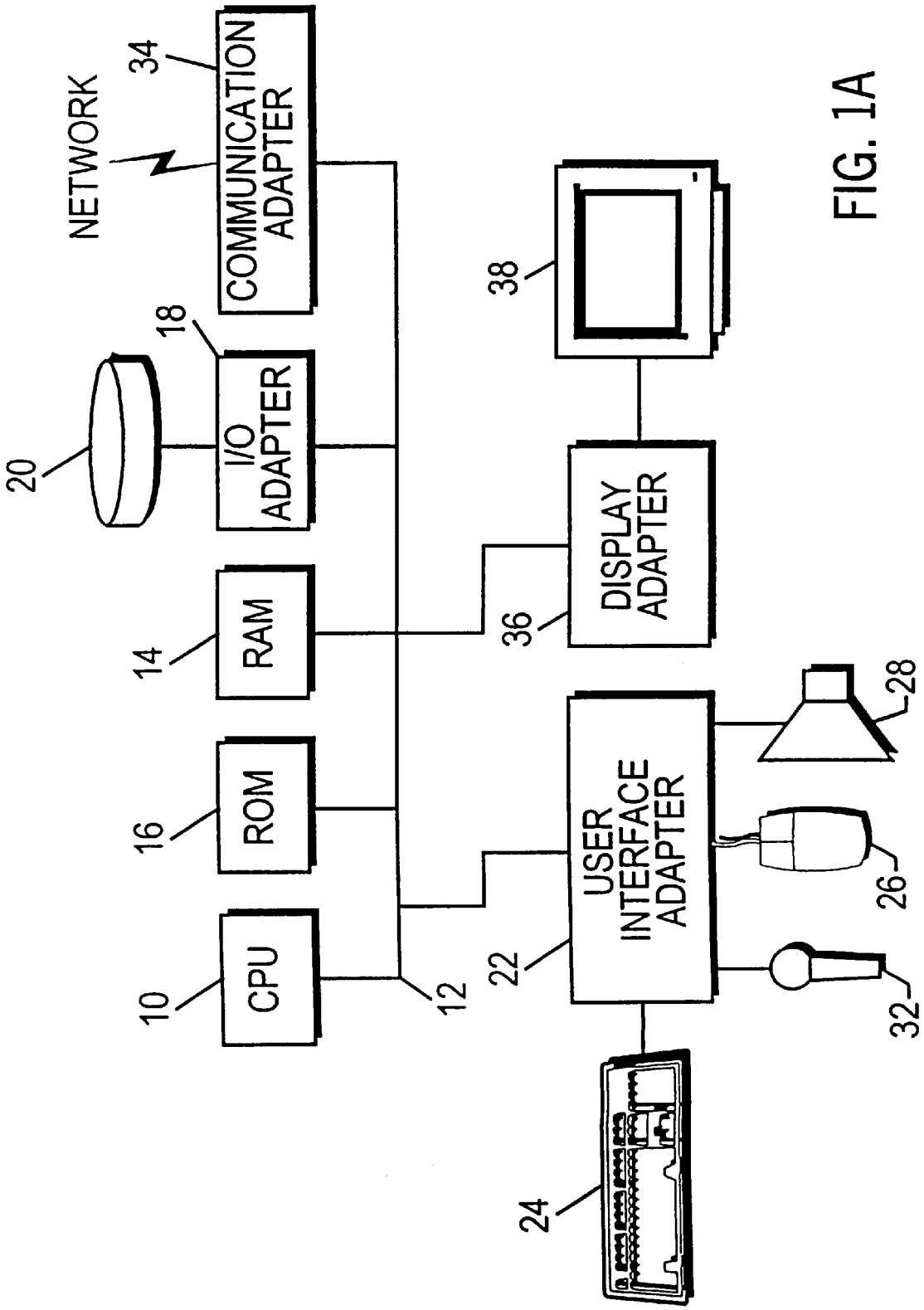
NETWORK
34
COMMUNICATION ADAPTER
18
I/O ADAPTER
20
14
RAM
16
ROM
10
CPU
12
38
DISPLAY ADAPTER
36
USER INTERFACE ADAPTER
22
28
26
32
24

FIG. 1A