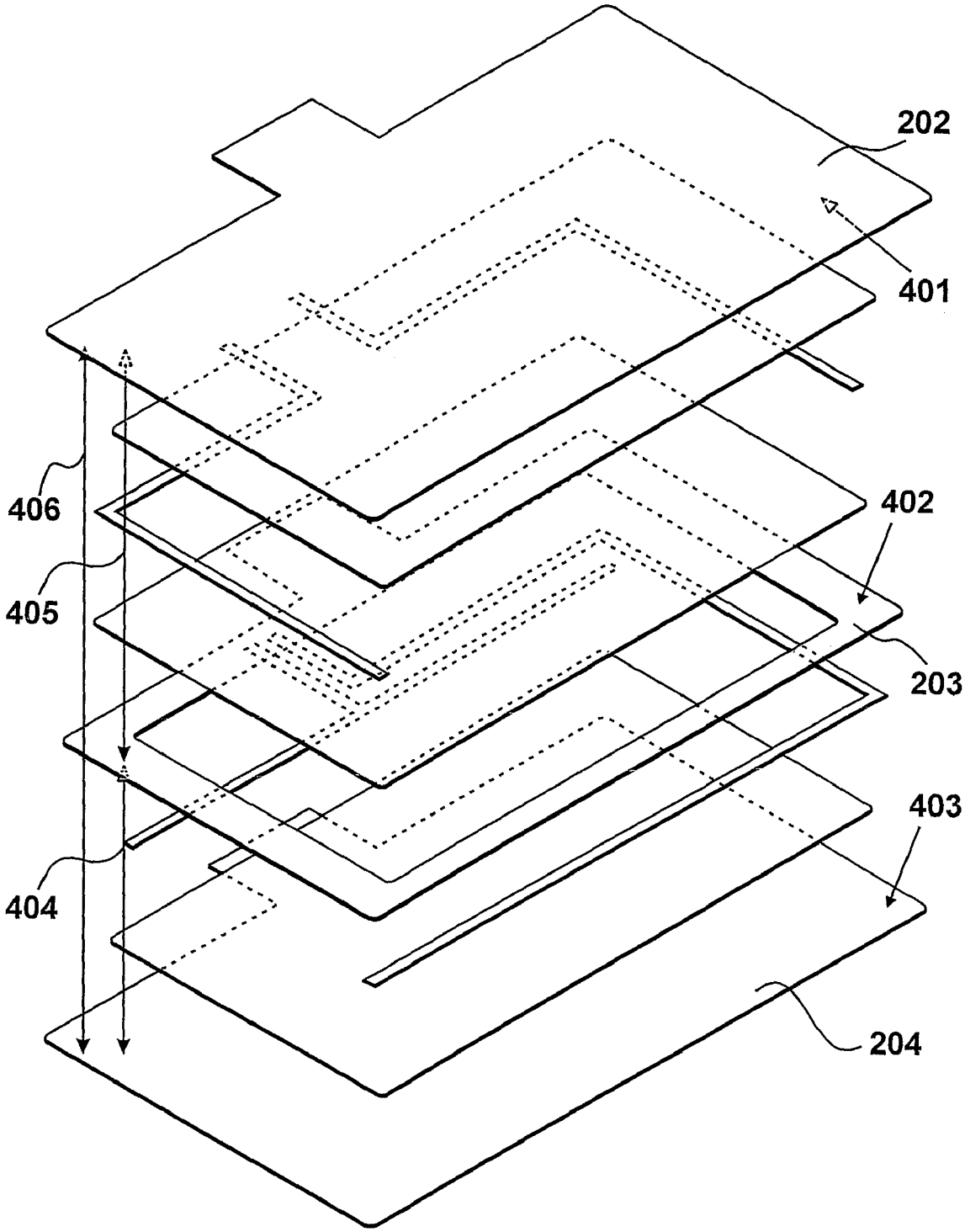

Figure 4