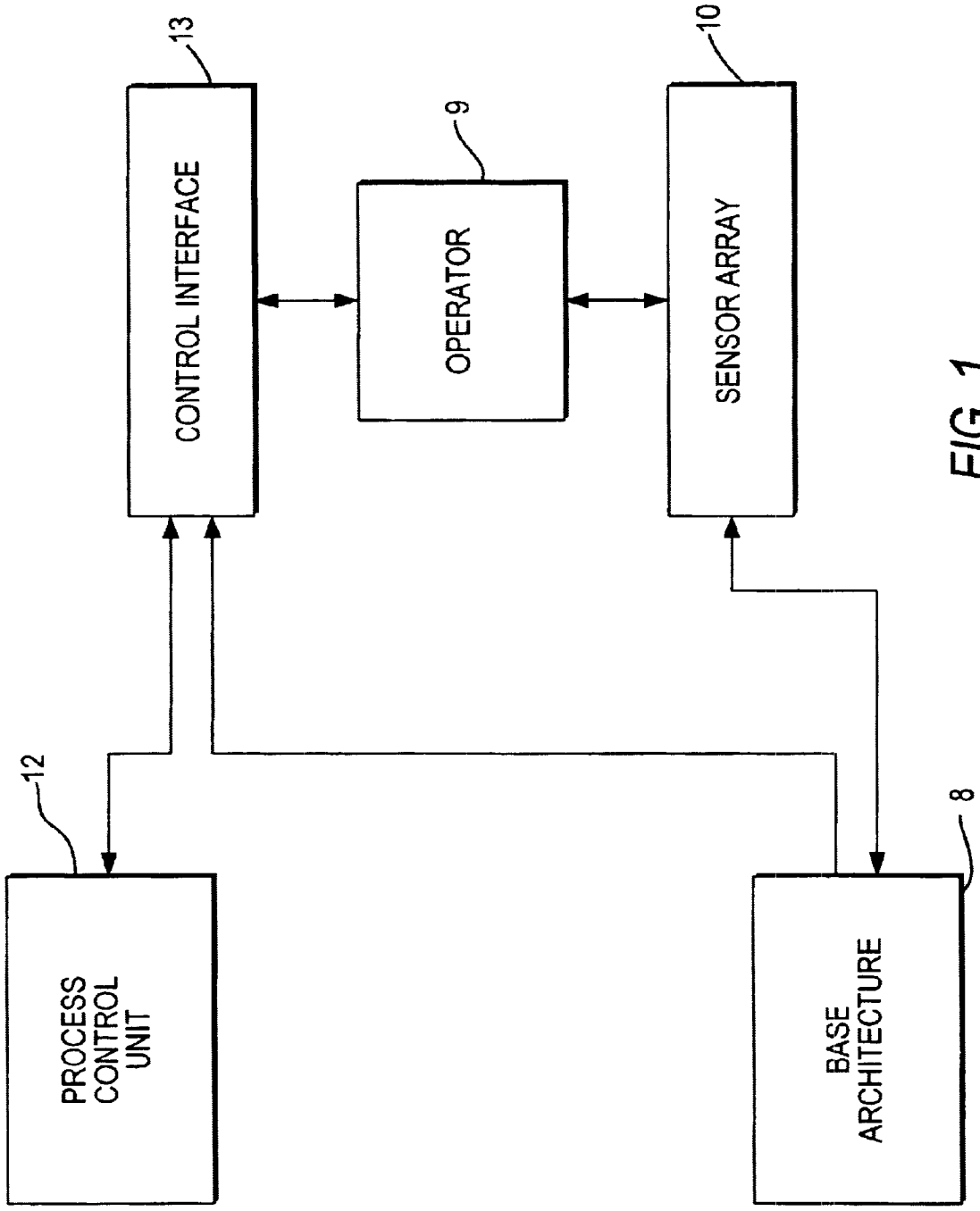
13
CONTROL INTERFACE
9
OPERATOR
10
SENSOR ARRAY
12
PROCESS CONTROL UNIT
8
BASE ARCHITECTURE

FIG. 1