US006650251B2

(12) **United States Patent**
Gerrity

(10) **Patent No.: US 6,650,251 B2**
(45) **Date of Patent: Nov. 18, 2003**

(54) **SENSORY MONITOR WITH EMBEDDED MESSAGING ELEMENT**

(76) Inventor: **Dan Gerrity**, 105 Duane St., Apt. 45B, New York, NY (US) 10007

(*) Notice: Subject to any disclaimer, the term of this patent is extended or adjusted under 35 U.S.C. 154(b) by 0 days.

(21) Appl. No.: **10/085,741**

(22) Filed: **Feb. 28, 2002**

(65) **Prior Publication Data**

US 2003/0160700 A1 Aug. 28, 2003

(51) **Int. Cl.**[7] **G08B 23/00**

(52) **U.S. Cl.** **340/963**; 340/425.5; 434/236; 600/558

(58) **Field of Search** 340/963, 961, 340/435, 901, 425.5, 945; 345/7; 348/563; 434/236, 29, 30, 35, 36, 49, 157; 600/558, 559

(56) **References Cited**

U.S. PATENT DOCUMENTS

3,060,795 A		10/1962	Corrigan et al.	434/236 X
3,574,283 A		4/1971	Albers	340/980 X
4,395,600 A	*	7/1983	Lundy et al.	381/73.1
5,027,208 A		6/1991	Dwyer, Jr. et al.	358/148
5,219,322 A	*	6/1993	Weathers	434/238 X
5,221,682 A		6/1993	Faris	358/183
5,911,581 A		6/1999	Reynolds et al.	434/236
6,155,834 A		12/2000	New, III	434/118
2002/0011925 A1		1/2002	Hahn	340/425.5

FOREIGN PATENT DOCUMENTS

DE	19952506	6/2001

OTHER PUBLICATIONS

Moshe Bar et al. 'Subliminal Visual Priming' Nov. 1998, Psychological Science, vol. 9, No. 6, pp. 464–469.
Endel Tulving et al. 'Priming abd Human Memory Systems' Jan. 19, 1990; Science vol. 247; pp. 301–305.
Caroyln Baker Cave 'Very Long–Lasting Priming in Picture Naming' Jul. 1997, Psychological Science, Vo. 8, No. 4, pp. 322–325.

* cited by examiner

Primary Examiner—Thomas J Mullen, Jr.
(74) *Attorney, Agent, or Firm*—Davidson, Davidson & Kappel, LLC

(57) **ABSTRACT**

A system for measuring human perception at edges of awareness includes a message transmitter providing embedded messages embedded in supraliminal information, a sensory monitor for measuring reaction in an individual to the embedded messages, and a control system connected to the message transmitter, the control system receiving an input from the sensory monitor, the control system including a real-time feedback control loop altering a perceptability of the embedded messages with respect to the supraliminal messages as a function of the sensory monitor input.
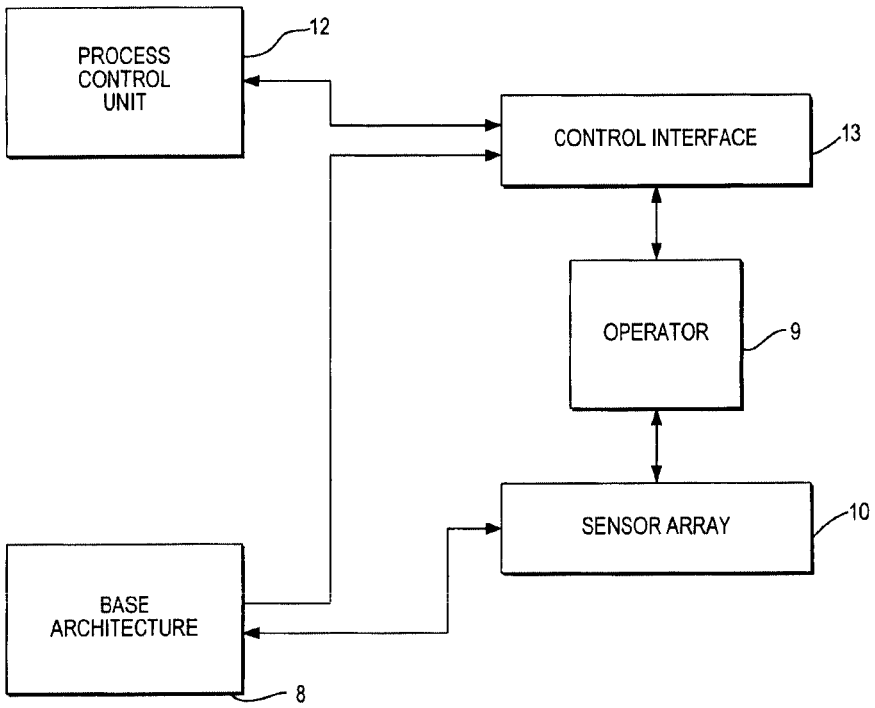
21 Claims, 5 Drawing Sheets