J. E. O'CONNOR.

TYPEWRITING MACHINE.

APPLICATION FILED OCT. 1, 1918.

1,336,151.

Patented Apr. 6, 1920.

2 SHEETS—SHEET 1.

Fig. 1.

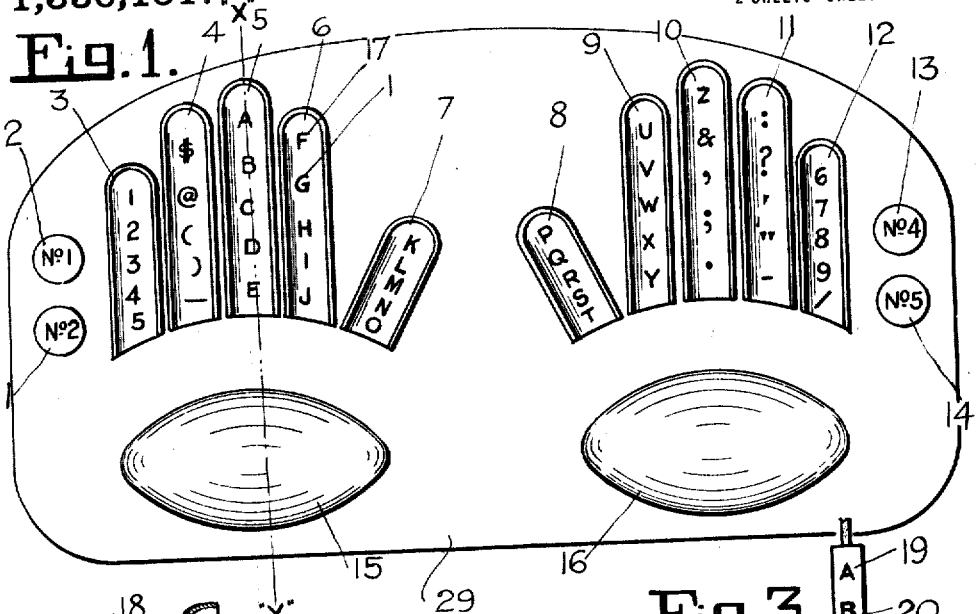

Fig. 3.

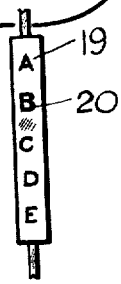

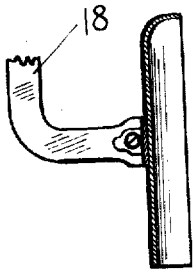

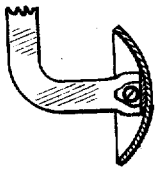

Fig. 2.

Fig. 4.

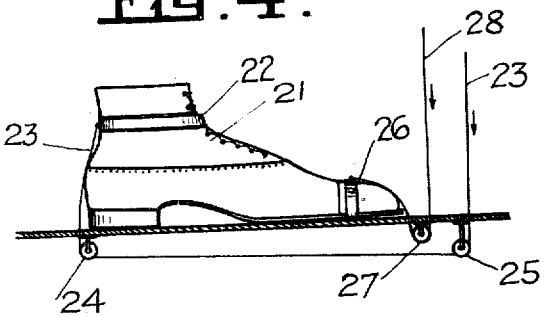

Witness,
Rosalie H. Wilson.

J. E. O'Connor INVENTOR