US005422751A

United States Patent [19]

Lewis et al.

[11] Patent Number: 5,422,751

[45] Date of Patent: Jun. 6, 1995

[54] **LIQUID CRYSTAL DISPLAY ASSEMBLY EMPLOYING FRONT BEZEL, FRAME HOLDING LIQUID CRYSTAL CELL ATTACHED TO BEZEL, AND LIGHT SOURCE AND BACK PLATE ATTACHED TO BEZEL**

[75] Inventors: **William J. Lewis**, Mt. View; **William J. Schonfeld; Robert Ricommini**, both of Saratoga; **Vijay Char**, San Jose, all of Calif.

[73] Assignee: **Apple Computer, Inc.**, Cupertino, Calif.

[21] Appl. No.: **959,861**

[22] Filed: **Oct. 14, 1992**

[51] **Int. Cl.**[6] **G02F 1/1333**; G02F 1/1335

[52] **U.S. Cl.** **359/83**; 359/48; 361/681

[58] **Field of Search** 354/83, 88, 48, 49, 354/50; 361/380, 392, 391, 681; 362/26, 31

[56] **References Cited**

U.S. PATENT DOCUMENTS

4,772,100	9/1988	Suenaya	359/83
4,789,224	12/1988	Boughsky	359/83
4,796,977	1/1989	Drake	359/83
5,030,943	7/1991	Anglin	359/49
5,146,354	9/1992	Plesinger	359/49
5,150,231	9/1992	Iwamoto	359/83
5,182,660	1/1993	Tanaka	359/49
5,195,822	3/1993	Takahashi et al.	362/296
5,196,993	3/1993	Herron et al.	361/393
5,264,992	11/1993	Hogdahl et al.	361/681
5,299,038	3/1994	Hamada et al.	359/49
5,333,073	7/1994	Suzuki	359/83
5,335,100	8/1994	Obuta	359/49

FOREIGN PATENT DOCUMENTS

0002127	1/1986	Japan .
0093425	4/1990	Japan .

Primary Examiner—William L. Sikes
Assistant Examiner—Kenneth Parker
Attorney, Agent, or Firm—Richard C. Liu

[57] **ABSTRACT**

The use of a single metal mounting frame within an LCD assembly having an outer plastic housing provides for a thin, light, rigid, and less expensive LCD assembly. The metal mounting frame is coupled to a bezel and aligns an LCD panel between the bezel and the mounting frame. A backlighting assembly which provides illumination for the LCD panel is aligned by the mounting frame and the bezel and is aligned between the mounting frame and a plastic cover panel. The plastic cover panel couples to the bezel to form the outer housing of the LCD assembly.
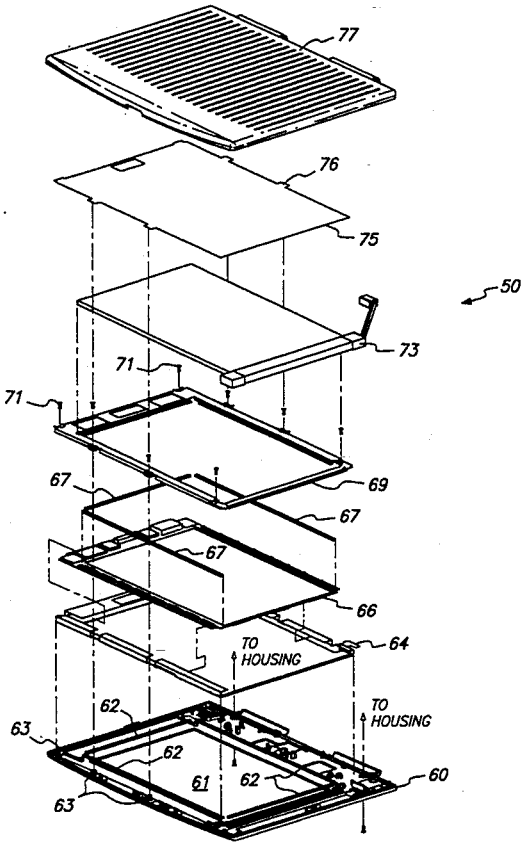
20 Claims, 6 Drawing Sheets