US009411351B2

(12) **United States Patent**
Ueno

(10) **Patent No.: US 9,411,351 B2**
(45) **Date of Patent: Aug. 9, 2016**

(54) **DC-TO-DC CONVERTER**

(71) Applicant: **KABUSHIKI KAISHA TOSHIBA**, Minato-ku, Tokyo (JP)

(72) Inventor: **Takeshi Ueno**, Kawasaki Kanagawa (JP)

(73) Assignee: **KABUSHIKI KAISHA TOSHIBA**, Tokyo (JP)

(*) Notice: Subject to any disclaimer, the term of this patent is extended or adjusted under 35 U.S.C. 154(b) by 0 days.

(21) Appl. No.: **14/673,220**

(22) Filed: **Mar. 30, 2015**

(65) **Prior Publication Data**

US 2015/0355654 A1 Dec. 10, 2015

(30) **Foreign Application Priority Data**

Jun. 9, 2014 (JP) 2014-118911

(51) **Int. Cl.**

G05F 1/575	(2006.01)
H02M 3/155	(2006.01)
H02M 3/156	(2006.01)
H02M 1/00	(2006.01)

(52) **U.S. Cl.**

CPC ***G05F 1/575*** (2013.01); ***H02M 3/156*** (2013.01); *H02M 2001/0025* (2013.01)

(58) **Field of Classification Search**

CPC G05F 1/575; G05F 1/468; G05F 1/56; H02M 3/155; H02M 3/157

USPC 323/273, 280, 281, 282, 283, 351

See application file for complete search history.

(56) **References Cited**

U.S. PATENT DOCUMENTS

7,609,042	B2 *	10/2009	Kokubun	H02M 3/1588 323/274
8,890,493	B2 *	11/2014	Isik	H02M 3/07 307/66
2004/0207375	A1 *	10/2004	Umemoto	H02M 3/156 323/282
2011/0181258	A1 *	7/2011	Ivanov	G05F 1/575 323/282
2012/0091981	A1 *	4/2012	Komiya	H02M 3/156 323/282
2012/0146514	A1 *	6/2012	Jeong	H05B 33/083 315/122
2013/0063106	A1 *	3/2013	Nishida	H02M 3/156 323/271
2014/0266414	A1 *	9/2014	Kim	G05F 1/468 327/543

OTHER PUBLICATIONS

Ultralow Voltage Step-Up Converter and Power Manager, Linear Technology Datasheet 2009.

* cited by examiner

Primary Examiner — Adolf Berhane

(74) *Attorney, Agent, or Firm* — Holtz, Holtz & Volek PC

(57) **ABSTRACT**

According to an embodiment, a direct current to direct current (DC-to-DC) converter includes a power stage, a generating circuit, a voltage dividing circuit, a subtractor and a controller. The power stage converts an input voltage to a first output voltage. The generating circuit generates a reference voltage by selecting one of candidate voltages in accordance with a level of the first output voltage. The voltage dividing circuit divides the first output voltage to obtain a second output voltage. The subtractor calculates a differential voltage between the reference voltage and the second output voltage. The control circuit generates a control signal to control the level of the first output voltage based on the differential voltage.
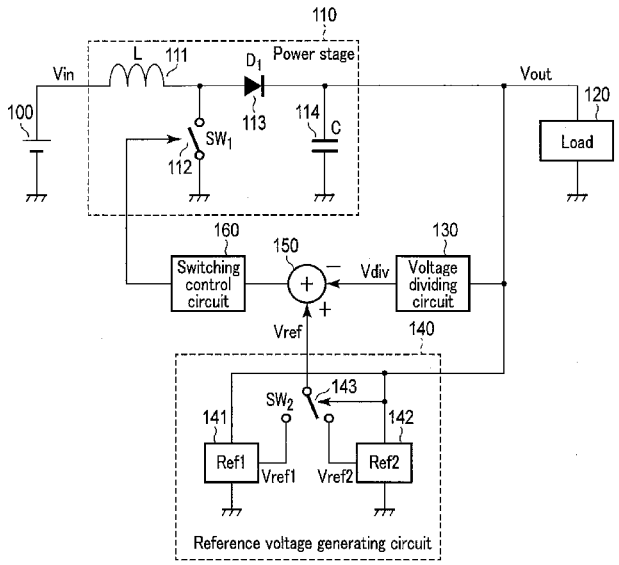
11 Claims, 5 Drawing Sheets