US009411151B2

(12) **United States Patent**
Casoria et al.

(10) **Patent No.: US 9,411,151 B2**
(45) **Date of Patent: Aug. 9, 2016**

(54) **BANGLE WITH MAGNIFYING LENS AND ILLUMINATION DEVICE**

(71) Applicants: **Eva Marie Casoria**, Thornwood, NY (US); **Peter Banyasz**, Hollis Hills, NY (US); **Marie Geha**, Fremont, CA (US)

(72) Inventors: **Eva Marie Casoria**, Thornwood, NY (US); **Peter Banyasz**, Hollis Hills, NY (US); **Marie Geha**, Fremont, CA (US)

(*) Notice: Subject to any disclaimer, the term of this patent is extended or adjusted under 35 U.S.C. 154(b) by 279 days.

(21) Appl. No.: **14/176,393**

(22) Filed: **Feb. 10, 2014**

(65) **Prior Publication Data**

US 2015/0226955 A1 Aug. 13, 2015

(51) **Int. Cl.**

F21V 21/14	(2006.01)
F21V 33/00	(2006.01)
G02B 25/00	(2006.01)
G02B 25/02	(2006.01)
F21Y 101/02	(2006.01)
A44C 5/00	(2006.01)

(52) **U.S. Cl.**

CPC ***G02B 25/02*** (2013.01); ***F21V 33/0008*** (2013.01); ***G02B 25/002*** (2013.01); *A44C 5/0007* (2013.01); *F21Y 2101/02* (2013.01)

(58) **Field of Classification Search**

CPC G02B 7/002; G02B 25/02; G02B 25/002; A44C 9/0076; A44C 5/0007; F21V 33/0008

USPC 362/800–802, 138, 139, 100–104, 187, 362/188, 190

See application file for complete search history.

(56) **References Cited**

U.S. PATENT DOCUMENTS

4,425,600 A * 1/1984 Barnhart H05B 33/00 224/219
4,521,832 A * 6/1985 Barbour F21L 4/00 200/60
5,754,349 A * 5/1998 Hon G02B 25/02 359/800
6,082,872 A * 7/2000 Ting F21L 4/00 362/191
6,540,107 B1 * 4/2003 Admony F41H 9/10 222/175
6,822,813 B2 * 11/2004 Jim G02B 25/02 359/802
7,218,463 B1 * 5/2007 Arsenault G02B 25/002 359/802
9,170,416 B2 * 10/2015 Rittenburg B43K 29/003 359/802
2012/0212938 A1 * 8/2012 Nguyen F21V 21/08 362/104
2014/0043794 A1 * 2/2014 Carriere F21V 33/0008 362/103
2015/0289227 A1 * 10/2015 Becker H04W 68/00 455/41.3

* cited by examiner

Primary Examiner — Anh Mai
Assistant Examiner — Arman B Fallahkhair
(74) *Attorney, Agent, or Firm* — Gerald E. Hespos; Michael J. Porco; Matthew T. Hespos

(57) **ABSTRACT**

A bangle is provided having a toroidal, tubular or cylindrical main body with at least inner and outer surfaces. A cut-out portion is provided in the main body extending from the outer surface towards the inner surface. A cavity extends at least partially through the main body and communicates with an opening formed in a wall of the cut-out portion. A magnifying lens is removably disposed in the cavity. An end of the magnifying lens is coupled to an illumination housing having an illumination device disposed therein. The illumination housing is configured to be placed in the cut-out section of the main body and substantially complete the shape of the main body. A protrusion is formed on an outer surface of the illumination housing for retracting the magnifying lens and the illumination housing from the cavity and cut-out portion, respectively.
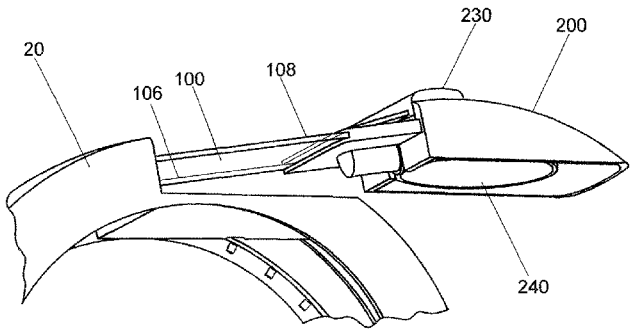
12 Claims, 6 Drawing Sheets