US009410651B2

(12) **United States Patent**
Lytton et al.

(10) **Patent No.: US 9,410,651 B2**
(45) **Date of Patent: Aug. 9, 2016**

(54) **COLLECTION OF OIL FLOATING ON A WATER SURFACE BY CONTACT WITH A COLD SURFACE**

(76) Inventors: **Daniel P. Lytton**, Cleveland, OH (US); **Raymond J. Keller**, Macedonia, OH (US)

(*) Notice: Subject to any disclaimer, the term of this patent is extended or adjusted under 35 U.S.C. 154(b) by 0 days.

(21) Appl. No.: **13/528,182**

(22) Filed: **Jun. 20, 2012**

(65) **Prior Publication Data**

US 2013/0340970 A1 Dec. 26, 2013

(51) **Int. Cl.**

B01D 37/00	(2006.01)
F24H 9/00	(2006.01)
F16L 53/00	(2006.01)
E02B 15/10	(2006.01)
F16L 9/18	(2006.01)
F16L 9/00	(2006.01)

(52) **U.S. Cl.**

CPC ***F16L 53/00*** (2013.01); ***E02B 15/10*** (2013.01); ***F16L 9/006*** (2013.01); ***F16L 9/18*** (2013.01)

(58) **Field of Classification Search**

None

See application file for complete search history.

(56) **References Cited**

U.S. PATENT DOCUMENTS

3,612,277	A *	10/1971	Van Stavern et al.	210/776
4,356,094	A *	10/1982	Ross	210/774
5,636,457	A *	6/1997	Eriksson	37/195
5,660,055	A *	8/1997	Eriksson	62/260
7,585,410	B2 *	9/2009	de Strulle	210/143
7,597,799	B2 *	10/2009	de Strulle	210/143
7,597,800	B2 *	10/2009	de Strulle	210/143
7,601,257	B2 *	10/2009	de Strulle	210/143
7,604,732	B2 *	10/2009	de Strulle	210/143
7,658,856	B2 *	2/2010	de Strulle	210/742
2010/0012597	A1 *	1/2010	David et al.	210/774
2013/0340970	A1 *	12/2013	Lytton	F16L 53/00 165/53

* cited by examiner

Primary Examiner — Robert James Popovics

(57) **ABSTRACT**

A crude oil removal device that is attached to a tethered umbilical line which feeds coolant thru the coolant coils. The refrigerated device creates an atmosphere to which crude oil will attach itself to, either floating or submerged for easy removal. The unit consists of two housings that contain the cooling coils which is sealed with rubber to maintain an air tight seal. The unit does not collect water while collecting the crude oil and can be used in virtually any weather condition.
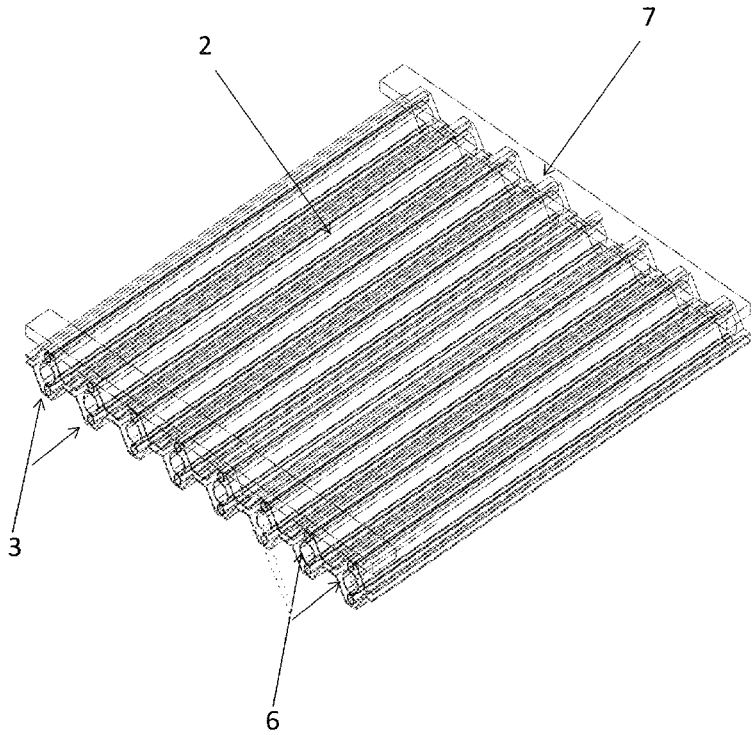
1 Claim, 8 Drawing Sheets