US009410351B2

(12) **United States Patent**
Ebeling

(10) **Patent No.: US 9,410,351 B2**
(45) **Date of Patent: Aug. 9, 2016**

(54) **SLIDE-GLIDE PRIVACY BLIND BARRIER SYSTEM**

(71) Applicant: **Cordell E Ebeling**, Isanti, MN (US)

(72) Inventor: **Cordell E Ebeling**, Isanti, MN (US)

(73) Assignee: **Cordell E. Ebeling**, Isanti, MN (US)

(*) Notice: Subject to any disclaimer, the term of this patent is extended or adjusted under 35 U.S.C. 154(b) by 0 days.

(21) Appl. No.: **14/211,017**

(22) Filed: **Mar. 14, 2014**

(65) **Prior Publication Data**

US 2014/0338845 A1 Nov. 20, 2014

Related U.S. Application Data

(63) Continuation of application No. 61/783,519, filed on Mar. 14, 2013.

(51) **Int. Cl.**

E05D 15/00	(2006.01)
E05D 15/06	(2006.01)
E04H 17/14	(2006.01)
E05F 17/00	(2006.01)
E04F 11/18	(2006.01)

(52) **U.S. Cl.**

CPC ***E05D 15/0621*** (2013.01); ***E04F 11/1817*** (2013.01); ***E04F 11/1842*** (2013.01); ***E04H 17/1417*** (2013.01); ***E05F 17/00*** (2013.01); *E04F 2011/1821* (2013.01); *E04F 2011/1827* (2013.01); *E04F 2011/1876* (2013.01); *E04H 2017/1452* (2013.01)

(58) **Field of Classification Search**

CPC E06B 3/46; E06B 9/01; E06B 9/02; E06B 9/04; E04H 17/00; E04H 17/14; E04H 2017/1447; E04F 11/18; E04F 11/1836; E04F 11/1842; E05D 15/06; E05D 15/16

USPC 160/214, 222, 216; 49/130

See application file for complete search history.

(56) **References Cited**

U.S. PATENT DOCUMENTS

2,250,059	A	*	7/1941	Farney	181/22
2,595,329	A	*	5/1952	Brooks	5/94
2,991,843	A	*	7/1961	Bell, Jr.	55/482
3,342,458	A	*	9/1967	Simonton	256/24
3,444,919	A	*	5/1969	Karoll	160/184
3,564,770	A	*	2/1971	Korbelic	49/38
3,775,906	A	*	12/1973	Dougherty	E05F 15/635 49/358
3,785,475	A	*	1/1974	Maynard	B23Q 7/03 198/345.3
4,033,073	A	*	7/1977	Bogan	49/38
4,465,262	A	*	8/1984	Itri et al.	256/24
4,688,618	A	*	8/1987	Saicheck, Jr.	E06B 9/362 60/168.1 R

(Continued)

Primary Examiner — Katherine Mitchell
Assistant Examiner — Johnnie A Shablack
(74) *Attorney, Agent, or Firm* — Merchant & Gould P.C.

(57) **ABSTRACT**

A convertible slide-glide panel privacy (or blind barrier section) system is provided for deck railings or fences. The system may consist of identical panel sections. A first panel section may consist of a stationary panel. Additional identical panel sections may be in an opposite facing orientation with respect to the first panel section and may be configured to slide in-between the most outer stationary structural supports (i.e., an upper railing, a lower railing and posts) of a deck railing or fence in order to either cover or open an existing space or gap between stationary balusters. The stationary panel may be attached directly under an upper railing and attached slide pieces. The sliding path of the additional panel sections may be linear or curvilinear. The sliding panel sections in the system may be constructed from a combination of or individually from composites, wood, metals, glass, lattice, PVC and transparent thermoplastics.
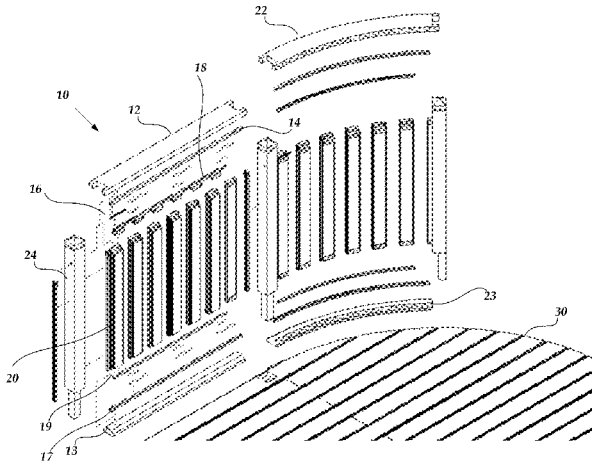
18 Claims, 15 Drawing Sheets