US009409651B2

(12) **United States Patent**
Tichborne et al.

(10) **Patent No.: US 9,409,651 B2**
(45) **Date of Patent: Aug. 9, 2016**

(54) **AIRCRAFT AERIAL REFUELLING SYSTEM**

(75) Inventors: **Franklin Tichborne**, Bristol (GB); **Mark Lawson**, Chepstow (GB); **Hugh Freeman**, Tredington (GB); **Arnaud Epifanie**, Bath (GB); **Adrian Edwards**, Chepstow (GB)

(73) Assignee: **Airbus Operations Limited**, Bristol (GB)

(*) Notice: Subject to any disclaimer, the term of this patent is extended or adjusted under 35 U.S.C. 154(b) by 1189 days.

(21) Appl. No.: **13/454,157**

(22) Filed: **Apr. 24, 2012**

(65) **Prior Publication Data**

US 2012/0273619 A1 Nov. 1, 2012

(51) **Int. Cl.**
B64D 39/00 (2006.01)

(52) **U.S. Cl.**
CPC ***B64D 39/00*** (2013.01)

(58) **Field of Classification Search**
CPC B64D 37/14; B64D 37/16; B64D 37/18; B64D 39/00
See application file for complete search history.

(56) **References Cited**

U.S. PATENT DOCUMENTS

2,944,488	A	7/1960	Meyer	
5,237,975	A *	8/1993	Betki et al.	123/497
2004/0011052	A1	1/2004	Clements	
2006/0278761	A1	12/2006	Cutler et al.	
2007/0215115	A1	9/2007	Hazama	
2008/0173762	A1	7/2008	Crowley	
2010/0243061	A1	9/2010	Mouskis et al.	
2011/0231056	A1	9/2011	Sjungargard et al.	
2013/0119202	A1 *	5/2013	French	244/135 A

FOREIGN PATENT DOCUMENTS

DE	4243118	A1	6/1994
EP	1 731 422	A1	12/2006
EP	1731422	A1	12/2006
GB	2449503	A	11/2008
WO	2010061155	A1	6/2010

OTHER PUBLICATIONS

Search Report corresponding to GB 1107115.6, dated Aug. 23, 2011.
European Search Report. Application No. EP 12 16 5221. Dated Nov. 3, 2015.

* cited by examiner

Primary Examiner — Brian M O'Hara
(74) *Attorney, Agent, or Firm* — Hauptman Ham, LLP

(57) **ABSTRACT**

An aircraft aerial refueling system including at least one pressure controlled fuel pump having a control system adapted to regulate the pump outlet fuel pressure using an outlet fuel pressure signal as control feedback. Also, methods of operating an aircraft aerial refueling system.
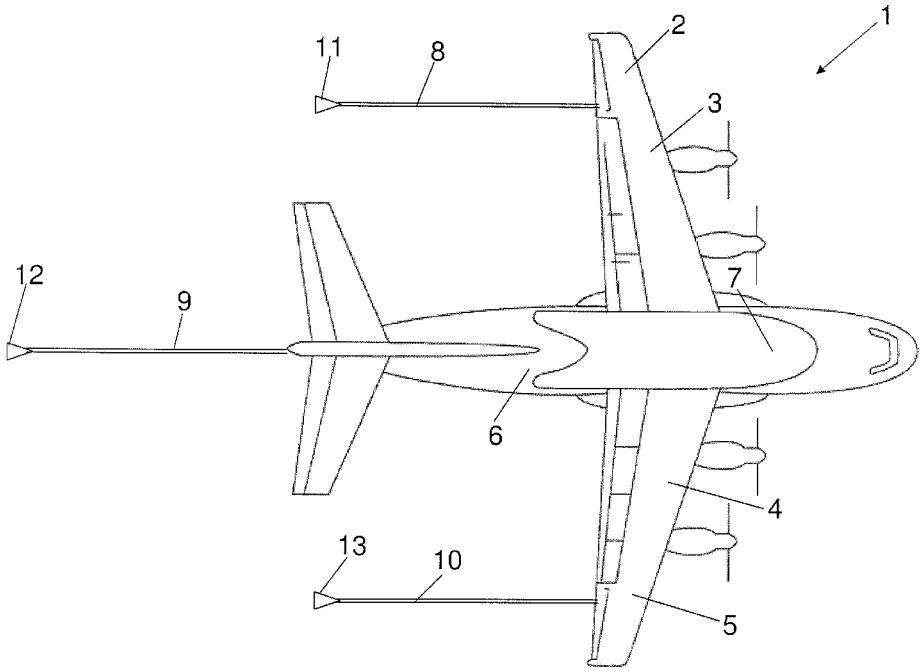
21 Claims, 7 Drawing Sheets