DIVIDER SCREEN ASSEMBLY

Filed Sept. 22, 1969 2 Sheets-Sheet 2

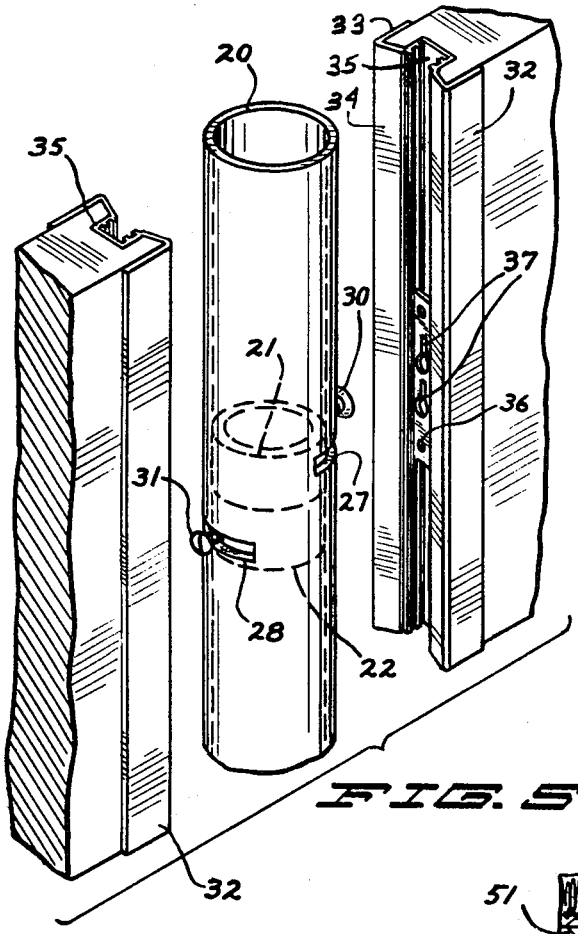

FIG. 5

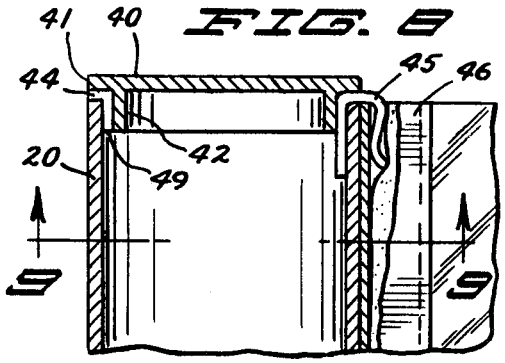

FIG. 8

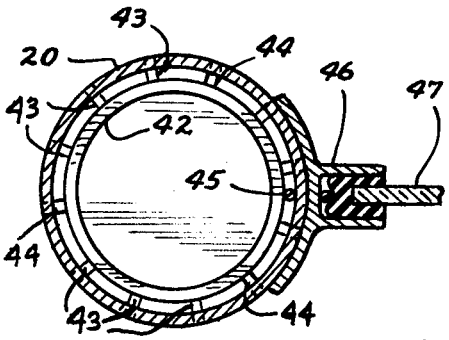

FIG. 9

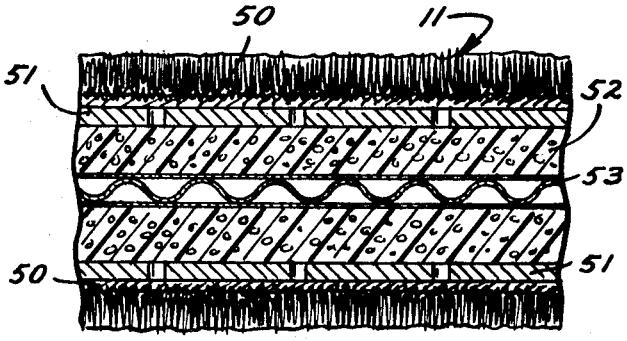

FIG. 7

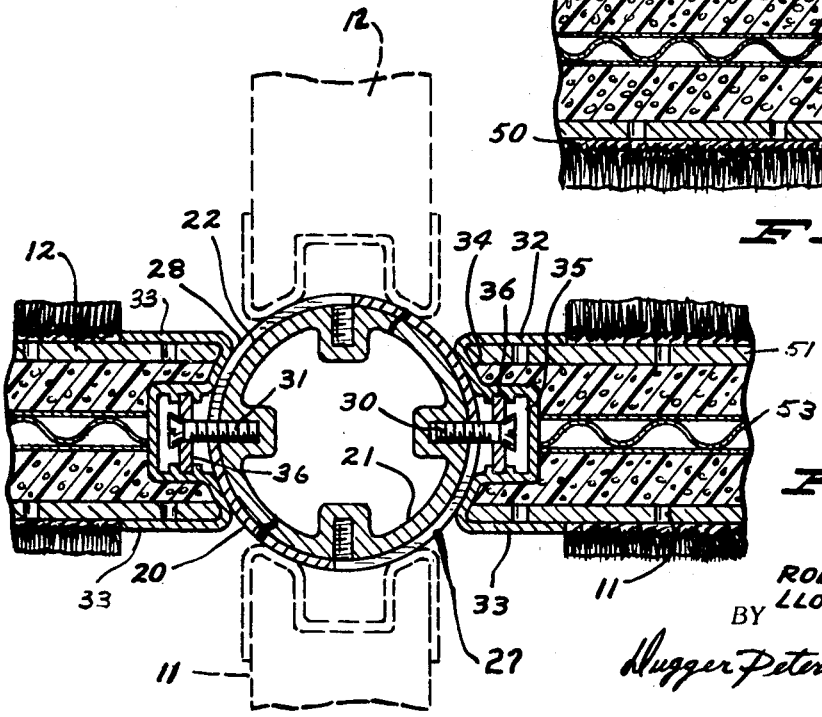

FIG. 6

INVENTORS
ROBERT E. MILES
LLOYD C. MOLLENKOPF
BY Hugger Peterson Johnson & Westman
ATTORNEYS